COMMITTEE SF-013

DR AS 1657

(Project ID: 1488)

Draft for Public Comment Australian Standard

LIABLE TO ALTERATION—DO NOT USE AS A STANDARD

BEGINNING DATE FOR COMMENT:	**20 July 2012**
CLOSING DATE FOR COMMENT:	**21 September 2012**

Important: The procedure for public comment has changed – please read the instructions on the inside cover of this document.

Fixed platforms, walkways, stairways and ladders—Design, construction and installation

(Revision of AS 1657—1992)

STANDARDS Australia

Draft for Public Comment
Australian Standard

The committee responsible for the issue of this draft comprised representatives of organizations interested in the subject matter of the proposed Standard. These organizations are listed on the inside back cover.

Comments are invited on the technical content, wording and general arrangement of the draft.

The method for submission of comment on this document is to register and fill in an online form via Standards Hub Website. Instructions and examples of comment submission are available on the website. Please use the following link—

https://www.hub.standards.org.au/hub/public/listOpenCommentingPublication.action

Comment must be via Hub, any emails or forms sent to us by fax or mail will not be considered by the Committee when it reviews the Public Comment received.

Please place relevant clause numbers beside each comment.

Editorial matters (i.e. spelling, punctuation, grammar etc.) will be corrected before final publication.

The coordination of the requirements of this draft with those of any related Standards is of particular importance and you are invited to point out any areas where this may be necessary.

Please provide supporting reasons and suggested wording for each comment. Where you consider that specific content is too simplistic, too complex or too detailed please provide an alternative.

If the draft is acceptable without change, an acknowledgment to this effect would be appreciated.

Once you have registered and submitted your comments via the online form, your comments are automatically submitted to the committee for review.

Normally no acknowledgment of comment is sent. All comments received via the Standards Hub Website by the due date will be reviewed and considered by the relevant drafting committee. We cannot guarantee that comments submitted in other forms will be considered along with those submitted via the Standards Hub online form. Where appropriate, changes will be incorporated before the Standard is formally approved.

If you know of other persons or organizations that may wish to comment on this draft Standard, could you please advise them of its availability. Further copies of the draft are available from the Publisher SAI Global at *http://www.saiglobal.com/*

SAI GLOBAL Customer Service Centre

Telephone: 13 12 42

Facsimile: 1300 65 49 49

e-mail: mailto:sales@saiglobal.com

Internet: http://www.saiglobal.com/shop

Draft for Public Comment

STANDARDS AUSTRALIA

Committee SF-013—Platforms, Gangways, Stairways and Ladders

DRAFT

Australian Standard

Fixed platforms, walkways, stairways and ladders—Design, construction and installation

(Revision of AS 1657—1992)

(To be AS 1657—2XXX)

Comment on the draft is invited from people and organizations concerned with this subject. It would be appreciated if those submitting comment would follow the guidelines given on the inside front cover.

Important: The procedure for public comment has changed – please read the instructions on the inside cover of this document

This document is a draft Australian Standard only and is liable to alteration in the light of comment received. It is not to be regarded as an Australian Standard until finally issued as such by Standards Australia.

PREFACE

This Standard was prepared by the Standards Australia Committee SF-013, *Platforms, Gangways, Stairways and Ladders* to supersede AS 1657—1992.

The Committee considered a number of International Standards on the subject of platforms, walkways, stairways and ladders for gaining access to machinery. While some of the material from these Standards has been included, the Committee thought it inappropriate to adopt them as Australian Standards, since AS 1657 has a broader scope than access to machines.

Other matters considered by the Committee included the need to improve compatibility with the National Construction Code (NCC), which provides a uniform set of technical provisions for the design and construction of buildings throughout Australia.

Changes in this edition include the following:

(a) *The inclusion of single stile ladders* Single stile ladders are being used in other parts of the world and there seems no reason to exclude them from use here. They should be used only where more conventional ladders cannot readily be used.

(b) *Roof access* Access to roofs (for the installation or maintenance of equipment, e.g. air-conditioning plants) has been addressed in this edition.

(c) References to the regulatory authority have been removed.

(d) All requirements pertaining to a particular form of access, e.g. stairways, ladders, are grouped together.

(e) A broader scope of testing of products and more complete test methods have been included.

(f) The issue of slip resistance of walking surfaces has been highlighted, and references to relevant Australian Standards and handbooks included.

A wider range of testing of products has been introduced for use when verification by engineering is not possible, practical or when the products are to be supplied as proprietary items and proof of performance is required.

Statements expressed in mandatory terms in notes to figures are deemed to be requirements of this Standard.

The terms ‘normative’ and ‘informative’ have been used in this Standard to define the application of the appendix to which they apply. A ‘normative’ appendix is an integral part of a Standard, whereas an ‘informative’ appendix is only for information and guidance.

CONTENTS

Page

APPENDICES

STANDARDS AUSTRALIA

Australian Standard

Fixed platforms, walkways, stairways and ladders—Design, construction and installation

SECTION 1 SCOPE AND GENERAL

1.1 SCOPE

This Standard sets out requirements for the design, selection, construction and installation of fixed platforms, walkways, stairways and ladders. It also applies to moveable or re-configurable access systems that are purpose built, utilising a combination of platforms, walkways, stairways and ladders (e.g. aircraft maintenance platforms). These structures are intended to provide safe access to places normally used by operating, inspection, maintenance and servicing personnel.

1.2 OBJECTIVE

The objective of this Standard is to provide technical specifications and criteria for fixed platforms, walkways, guardrail, stairways, ladders and permanently configured, but movable platforms that are used in the workplace, in order to reduce the risks to the safety of users.

1.3 APPLICATION

1.3.1 Where this Standard applies

This Standard applies to fixed platforms, guardrail, walkways, stairways and ladders. It also applies to movable platforms that are permanently configured but that may be site adjustable or assembled/modified.

This Standard applies to permanently installed roof access, where such access is for the purpose of installing, operating, inspecting, maintaining or servicing equipment that is located on, or is accessible from the roof. It also applies to permanently installed access for inspection and maintenance of the roof itself.

This Standard may also be used for guidance in providing access to some parts of mobile plant or light and telecommunications towers. While such access may not be capable of complying with all the requirements of this Standard, the principles and design loadings should be followed.

1.3.2 Where this Standard does not apply

This Standard does not apply to the following:

(a) scaffolding which may be used in similar situations

(b) access systems for earth-moving machinery (see AS 3868);

(c) access for the disabled (see AS 1428);

(d) temporary access, e.g. by means of portable ladders; or

(e) general access in buildings, which is dealt with in the National Construction Code (NCC) or where special provision is made in the NCC or other regulations, e.g. for means of escape from fire.

(f) Attic type ladders—while some on the market are able to comply with this Standard, it is not the intention of this Standard to provide specifications for such ladders.

(g) For access to lift machine rooms, see AS 1735.

NOTE: There may be additional or conflicting requirements in legislation. Users should make themselves aware of these requirements.

1.4 REFERENCED DOCUMENTS

The following documents are referred to in this Standard:

AS

1111 Hexagon head bolts and screws—Product grade C
1111.1 Part 1: Bolts

1192 Electroplated coatings—Nickel and chromium

1428 Design for access and mobility (series)

1604 Specification for preservative treatment
1604.1 Part 1: Sawn and round timber
1604.3 Part 3: Plywood

1720 Timber structures
1720.1 Part 1: Design methods

1735 Lifts, escalators and moving walks (series)

1789 Electroplated zinc (electrogalvanized) coatings on ferrous articles (batch process)

3600 Concrete structures

3700 Masonry structures

3868 Earth-moving machinery—Design guide for access systems

3990 Mechanical equipment—Steelwork

4100 Steel structures

4586 Slip resistance classification of new pedestrian surface materials

4663 Slip resistance measurement of existing pedestrian surfaces

AS/NZS

1170 Structural design actions
1170.0 Part 0: General principles
1170.1 Part 1: Permanent, imposed and other actions
1170.2 Part 2: Wind actions
1170.3 Part 3: Snow and Ice actions

1252 High strength steel bolts with associated nuts and washers for structural engineering

1554 Structural steel welding
1554.1 Part 1: Welding of steel structures
1554.6 Part 6: Welding stainless steel for structural purposes

1604.1 Part 1: Specification for preservative treatment—Sawn and round timber
1604.3 Part 3: Specification for preservative treatment—Plywood

1664 Aluminium structures
1664.1 Part 1: Limit state design
1664.2 Part 2: Allowable stress design

1665 Welding of aluminium structures

1891 Industrial fall-arrest systems and devices (series)

AS/NZS
4600 Cold-formed steel structures

4680 Hot-dipped galvanized (zinc) coatings on fabricated ferrous articles

4791 Hot-dipped galvanized (zinc) coatings on ferrous open sections, applied by an in-line process

4792 Hot-dip galvanized (zinc) coatings on ferrous hollow sections, applied by a continuous or a specialized process

HB 197 An introductory guide to the slip resistance of pedestrian surface materials

EN
13101 Steps for underground man entry chambers—Requirements, marking, testing and evaluation of conformity.

1.5 DEFINITIONS

For the purpose of this Standard, the definitions below apply.

1.5.1 Access hatch

A device normally closed but which can be opened to provide access through a platform, roof or other similar structure.

NOTE: Also known as a trap door.

1.5.2 Fixed

Permanently installed or configured structures used to gain access, including platforms from which work is performed.

1.5.3 Floor

A surface which supports a person, equipment or materials.

1.5.4 Going

The horizontal distance from the nosing of one stair tread to the nosing of the next stair tread above or below.

1.5.5 Guardrail

The highest rail in guardrailing fixed parallel to a floor or platform.

1.5.6 Guardrailing

A system of rails or panels, or both, that provides edge protection at the edge of a floor or platform or walkway.

1.5.7 Handrail

A rail that provides a handhold on a platform, walkway, stairway or step-type ladder.

NOTE: It may form part of a guardrail.

1.5.8 Headroom

The minimum vertical distance, clear of all obstacles such as beams or ducts, above the floor or the slope line of the stair tread nosing.

1.5.9 Infill

Typically a solid or mesh panel that prevents a person or material from falling through guardrailing.

1.5.10 Ladder

1.5.10.1 *Rung-type ladder*

A structure comprising a stile or stiles and rungs on which a person may stand or step in ascending or descending.

1.5.10.2 *Step-type ladder*

A structure comprising stiles and treads on which a person may stand in or step ascending or descending, and which also incorporates handrails.

1.5.11 Ladder flight

The continuous part of a fixed ladder between—

(a) arrival and departure levels, in the case of ladders without platforms;

(b) arrival or departure levels and the nearest platform; or

(c) successive rest platforms.

1.5.12 Ladder cage

A fixed enclosure that encircles the climbing space of a ladder.

1.5.13 Landing

A level area that provides access to a stairway or ladder, or is located at an intermediate level in a system of stairways or ladders.

1.5.14 May

Indicates an option.

1.5.15 Nosing

The leading edge of a stair tread.

1.5.16 Pipe

A hollow section made as a production item.

NOTES:

1 Pipe may be round, oval, square or rectangular in section.

2 For the purpose of this Standard, the word 'pipe' is synonymous with 'tube' or 'structural hollow section'.

1.5.17 Platform

A designated surface to support a person working or resting or materials used by persons.

1.5.18 Post

A structural component, other than infill, that is used to support handrail or guardrailing.

NOTE: The terms 'stanchion' and 'rectangular support' are synonymous with 'post' and are used for similar types of products by different industries.

1.5.19 Riser

The vertical distance from the top of one stair tread and the next stair tread above or below.

1.5.20 Rung

A rounded cross-piece forming a step on a rung-type ladder.

1.5.21 Self-closing gate

A section or part of a guardrail that is intended to be easily opened. When the section is not held open, it will automatically close under the influence of gravity, a spring or other means.

1.5.22 Shall

Indicates that a statement is mandatory.

1.5.23 Should

Indicates a recommendation.

1.5.24 Slip resistance

The effective friction of a walking surface.

1.5.25 Stair

A sloping structure fitted with stair treads and having at least two risers and a slope within the range of 20° to 45°.

1.5.26 Stairway flight

A single continuous set of rises and goings, up to a maximum of 18.

1.5.27 Stile

A member that supports the treads or rungs of a ladder or stairway.

NOTE: The terms 'side rail' or 'stringer' are often used and are synonymous with 'stile'.

1.5.28 Toe-board (kickboard)

A purpose designed component fixed on the edge of a floor, platform or walkway to prevent objects from falling.

NOTE: A toeboard is typically associated with guardrailing.

1.5.29 Tread

A component of a stair having a horizontal surface to support a person's foot.

1.5.30 Walkway

A designated walking surface used for moving from one point to another.

SECTION 2 MEANS OF ACCESS

2.1 GENERAL

There shall be a means of access and egress to all the zones and points where the need for access for operating, inspection, maintenance and servicing equipment can be foreseen.

2.2 SELECTING A MEANS OF FIXED ACCESS

The means of access shall be selected from the following list and considered in the hierarchical order given (see also Figure 2.1):

(a) Level walkway or access from ground level.

NOTE: A range of slope from 0° to 3° from the horizontal is preferred.

(b) Sloping walkway with an angle nominally between 3° and 20° in the direction of travel.

NOTE: A range of slope between >3° and 10° is preferred.

(c) Stairs with an angle nominally between 20° and 45°.

NOTE: A range of slope between 30° and 38° is preferred.

(d) Inclined step-type ladders with an angle nominally between 60° and 70°.

(e) Inclined twin-stile rung-type ladders with an angle nominally between 70° and 90°.

NOTE: A range of slope between 70° and 75° is preferred.

(f) Single stile rung-type ladders with an angle nominally between 85° and 90°.

NOTE: The lower angle in each range is preferred.

(g) Individual-rung ladders (step-irons) with an angle nominally between 80° and 90° to the horizontal.

The limits of slope for each of the above means of access are illustrated in Figure 2.1.

NOTES:

1 Initial access to permanent equipment is sometimes gained by the use of portable ladders or other temporary equipment in order to maintain site security or public safety (e.g. temporary ladder used to gain access to base of permanent ladder placed a distance off ground to prevent unauthorized access).

2 Appendix A provides further information on selecting walkways, stairways and ladders.

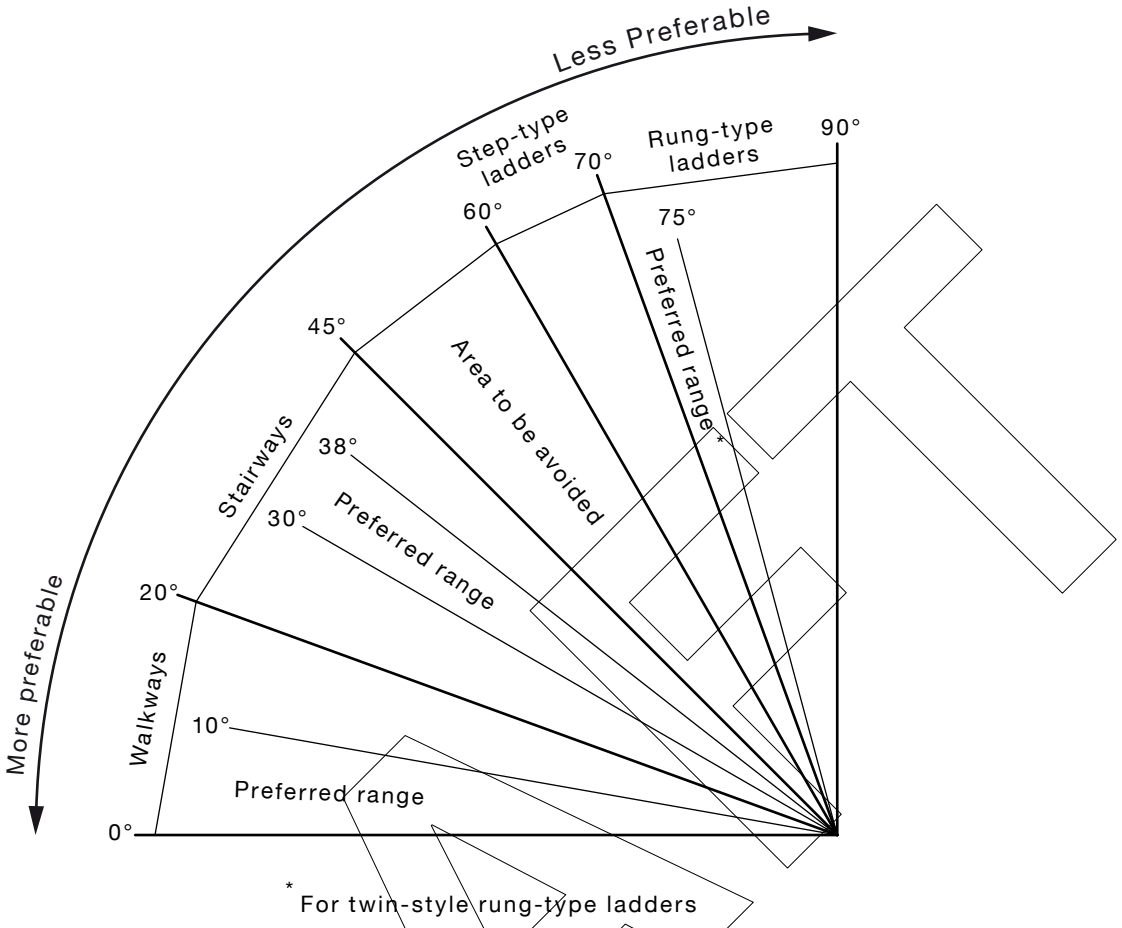

FIGURE 2.1 SELECTION OF ACCESS—SLOPE CONSIDERATIONS

SECTION 3 DESIGN AND FABRICATION

3.1 GENERAL DESIGN REQUIREMENTS

3.1.1 General

The design of the structural work comprising the platform, walkways, stairways, ladders, and guardrailing shall comply with the relevant requirements of the following Standards:

(a) For aluminium: AS/NZS 1664 Parts 1 and 2.

(b) For concrete: AS 3600.

(c) For masonry: AS 3700.

(d) For timber: AS 1720.1.

(e) For steel: AS/NZS 4600, AS 3990 or AS 4100.

(f) For welding: AS/NZS 1554.1, AS/NZS 1554.6 or AS/NZS 1665.

(g) For bolts: AS 1111.1 or AS/NZS 1252.

NOTE: Where any Standard is used as a regulatory document, the National Construction Code (NCC) overrules in any difference arising between it and the Standard.

3.1.2 Loading

Except where otherwise specified in this Standard, design loadings shall be in accordance with AS/NZS 1170.1. Where loading due to wind or snow is foreseen, cognizance shall be taken of the design loadings in AS/NZS 1170.2 and AS 1170.3 respectively.

Design loads for particular means of access are specified in the relevant Section of this Standard for that means of access. Design loads given in this Standard are the minimum imposed actions. Reference shall be made to AS/NZS 1170.0 for appropriate load factors and combinations of actions to determine the design actions.

NOTE: Destructive testing for ultimate strength requires the above loads to be multiplied by the appropriate load factor in AS/NZS 1170.0 for design action effect, and again by a further factor for test load from that Standard.

3.1.3 Slip resistance

Walking surfaces, including steps, treads and rungs, shall be slip resistant.

Guidance in the identification and reduction of slip hazards is given in AS/NZS 3661.2 and HB 197. Suitable test methods of slip resistance for pre-existing and new surfaces can be found in AS 4586 and AS 4663.

NOTE: It is very important for designers and specifiers to note that the issue of slip resistance must be addressed to ensure this common form of accident is minimised, and the treatment needs to be in accordance with the likely use of the installation, especially in locations where material buildup, oils and liquids may be present, where users shoes may have slip inducing material on them and where sloping surfaces may exist. Additionally, some grid style flooring has superior grip in one direction to that at 90 degrees – this also needs to be considered when selecting products. Designers are strongly advised to take account of such issues when selecting flooring materials and to ensure a comparison is made between products before a final decision is made (see also Clause 4.2).

3.1.4 Change in level

Where the level of a walkway above an adjacent walkway or floor is 300 mm or less, access from one level to the other may be gained without the provision of an intermediate step.

Where the change of level is greater than 300 mm, but does not exceed 450 mm, a minimum of one intermediate step shall be provided.

Access between adjacent levels where the difference exceeds 450 mm shall be in accordance with the requirements of Section 7 or by means of a sloping walkway complying with Clause 5.1.1(c).

3.1.5 Headroom

The minimum headroom shall be 2000 mm.

NOTE: In applications where helmets are worn the preferred dimension is 2100 mm.

3.1.6 Fixing of guardrailing components

All guardrailing components shall be securely fixed so that guardrails, posts and intermediate rails or infill, form an integral structure or system.

3.2 MATERIALS

3.2.1 General

Materials shall comply with the specifications of Australian Standard, such as those listed in Clause 1.4, or, with other relevant standards.

NOTE: The potential for corrosion that can occur when dissimilar metals are brought into contact with one another under certain conditions should be considered.

3.2.2 Metals

3.2.2.1 *Galvanized steel pipe*

Where galvanized pipes are used for their corrosion resistance, they shall be hot-dip galvanized internally and externally in accordance with the requirements of AS/NZS 4680 for hollow sections.

3.2.2.2 *Ungalvanized steel pipe*

Where ungalvanized steel pipe is used in a corrosive environment, the ends of the pipe shall be sealed to prevent internal corrosion. Corrosion protection in accordance with Clause 3.3.2 shall be applied.

3.2.3 Flooring materials

3.2.3.1 *Timber*

Flooring for platforms, walkways and landings may be of dressed or undressed timber or plywood. Timber or plywood floors, treads and toeboards exposed to the weather or high moisture environments shall be of Class 1 or Class 2 durability or be treated in accordance with AS 1604.1 for timber or AS 1604.3 for plywood.

3.2.3.2 *Metal plate*

Metal plate shall be of chequered, indented or other suitable type. Any gap between plates shall not exceed 10 mm. Such a gap may be of any length.

3.2.3.3 *Concrete*

A concrete floor shall be in accordance with AS 3600, wood-float finished or rendered slip-resistant by other suitable means.

3.2.3.4 *Grating and expanded metal*

The smaller dimension of any opening shall not exceed 45 mm and the area of any opening shall not exceed 5000 mm^2. Any gap between adjacent made up sections of grated floor shall not exceed 10 mm and may be of any length.

Where straight edge bars are not fitted, the size of any opening at the joint between adjacent panels shall not exceed the requirements for openings in the grating (see Figure 3.1).

3.3 FABRICATION

3.3.1 Welding

Welds shall be dressed smooth, sharp edges removed and where appropriate, plugs fitted to the end of pipe sections.

Welding of steel components shall be in accordance with AS/NZS 1554.1.

Welding of aluminium components shall be in accordance with AS/NZS 1665.

NOTE: When designing aluminium structures, weld strength needs to be ensured for welded applications.

3.3.2 Fixings

The methods of attachment shall be capable of sustaining the design loadings and the environment in which the fixing will be placed, e.g. thermal loading, vibration or chemical attack.

Specific load requirements are given in Clause 4.2 for platforms and landings, Clause 5.2 for walkways, Clause 6.1 for guardrailing, Clause 7.1.1 for stairways and Clause 7.1.2 for fixed ladders.

Bolts for the structural attachment of ladders, stairs and platforms shall have a combined minimum tensile capacity of 63.2 kN. No less than two bolts shall be used at every fixing location (e.g. at the top of a ladder).

Where installed externally, fixings shall be hot dip galvanized or manufactured from stainless steel.

Fixing shall prevent floor panels being dislodged and to minimize trip hazards.

NOTES:

1 Chemical anchors or expansion-type fixing devices should be installed according to the manufacturer's instructions.

2 Deck fixings having heads proud of the walking surface should be avoided, but where used should be designed to minimize the risk of tripping.

3.3.3 Corrosion protection

Steps shall be taken to minimize corrosion relative to the intended end use of the equipment.

NOTE: Examples of suitable coatings are specified in AS 1192, AS 1789, AS 1790, AS/NZS 4680, AS/NZS 4791 and AS/NZS 4792. Powder coatings and anodizing may also be suitable coating methods.

3.3.4 Floors

All floors shall be evenly laid. Any variation in height between adjacent boards or plates shall not exceed 5 mm.

NOTE: Deck fixings having heads proud of the walking surface should be avoided, but when used should be designed to minimize the risk of tripping.

SECTION 4 PLATFORMS AND LANDINGS

4.1 GENERAL

4.1.1 General

Platforms and landings shall be level, with a maximum slope in any direction between 0° to 3°.

4.1.2 Change in level

For requirements for change in level, see Clause 3.1.4.

4.1.3 Width

The clear width of the walking/working surface of every platform and landing shall be not less than 600 mm.

4.1.4 Headroom

For requirements for headroom, see Clause 3.1.5.

4.1.5 Protection

Where persons have access to the area below a platform or landing, protection shall be provided in accordance with Clause 4.5.

4.1.6 Design and fabrication

The design and fabrication of all platforms and landings shall be in accordance with Section 3.

4.2 DESIGN LOADS FOR FLOORS

Floors shall be designed for the dead load of the designed structure plus the following minimum imposed loadings:

(a) a superimposed live loading of not less than 2.5 kPa uniformly distributed; or

(b) a concentrated loading applied through a 100 mm × 100 mm pad of not less than 1.1 kN at any point; whichever produces the more adverse effect.

Where the floor of the platform or landing is likely to incur loads exceeding those given in items (a) or (b) above, reference shall be made to AS/NZS 1170.1 for imposed loads.

In all cases, the design actions shall be determined using load factors and combinations of actions according to AS/NZS 1170.0.

4.3 PLATFORM SURFACES

Surfaces shall be installed as follows:

(a) All elements and panels shall be securely fixed to the supporting structure and shall not rely on adjacent sections for the prevention of lateral movement. They shall be fixed so that the removal of any element or panel will not affect the security of the remaining sections.

(b) All elements and panels shall be evenly laid with a maximum variation in height of 5 mm between adjacent sections.

(c) Where the surface is likely to become wet, provision shall be made to prevent the retention of the liquid by drainage or other means.

(d) Slip resistance shall comply with Clause 3.1.3.

(e) Fixings shall comply with Clause 3.3.4.

(f) Floors shall comply with Clause 3.3.5.

4.4 GUARDRAILING

Continuous guardrailing complying with Section 6 shall be installed on exposed sides of platforms and landings except for the following:

(a) At the points of access from a stairway or ladder.

(b) Where there is a permanent structure not more than 100 mm from the edge of the platform or landing capable of providing at least the equivalent protection to guardrailing.

(c) On the sides and edges of a platform, the level of which is not greater than 300 mm above that of an adjacent platform or floor, provided that—

(i) the smallest dimension of the upper platform is not less than 1200 mm; and

(ii) the distance from any edges of the unprotected upper platform to the protection on the edge of the lower platform is not less than 1000 mm.

Where it is not possible to apply the requirement of Item (ii) above, the minimum height of the protection at the edge of the lower platform shall be increased by 300 mm.

The unprotected edges of such platforms shall be marked so that they are clearly visible in their surroundings.

The provision of guardrailing for platforms is shown in Figure 4.1.

4.5 SAFETY BELOW THE PLATFORM OR LANDING

Where persons have access to or work beneath any platform or landing, the floor of such platform or landing shall be designed, or provided with protection, to prevent objects falling through the floor reaching the area below.

NOTE: Protection may typically take the form of a lightweight protective barrier fixed beneath the platform, walkway or landing, e.g. 12 mm square mesh.

No aperture in the protection shall permit the passage of a 15 mm diameter ball.

4.6 TOEBOARDS

Where an object could fall from a platform or landing onto an area to which access by persons is available, a toeboard complying with Clause 6.2.3 shall be provided. This requirement need not apply where there is a permanent structure within 10 mm of the edge of the platform or landing.

4.7 EDGES

Where unprotected edges of platforms and landings may cause a person to walk off the edge due to poor lighting or excessive lighting (eg. a dark factory, sun on aluminium products, etc.) provision should be made to highlight the edge.

SECTION 5 WALKWAYS

5.1 GENERAL REQUIREMENTS

5.1.1 Angle of slope

The angle of slope of a walkway shall be as follows:

Level walkway The angle of slope of the walking surface shall not exceed 3° in any direction.

Sloping walkway The angle of slope of the walking surface in the direction of travel shall not exceed 20° (preferred range is between 3° and 10°). The angle of slope of the walking surface perpendicular to the direction of travel (i.e. cross slope) shall not exceed 7°.

NOTE: The preferred range of slope perpendicular to the direction of travel (cross slope) is between 0° and 3°. However, allowance has been given to allow sloping walkways to be mounted directly onto low pitched roofs or other surfaces with a resulting walkway cross slope not exceeding 7°.

Where the angle of slope of the walkway exceeds 10° in the direction of travel, cleats complying with Clause 5.3.3 are required. Where the angle of slope exceeds 15°, a method of preventing excessive sliding in accordance with Clause 5.4.2 is required.

5.1.2 Access between adjacent levels

For requirements for access between adjacent levels, see Clause 3.1.4.

5.1.3 Width

The following requirements apply:

(a) The clear width of the walking surface of every walkway shall be not less than 600 mm except as allowed in (b) and (c) below.

(b) Where guardrails are installed on both sides of a walkway, the clear width between any elements of the guardrailing shall be not less than 550 mm.

(c) Where a fixed structure is present on one or both sides of the walkway and is within a 100 mm distance from the walkway, the clear width measured between the structure and the inside surface of any guardrail, or between the two structures, shall be not less than 600 mm.

NOTE: If the fixed structure is at shoulder height, the likely contact parts of the structure should be painted with a contrasting colour to highlight the possible contact surface.

Walkway width shall be shown in Figure 5.1.

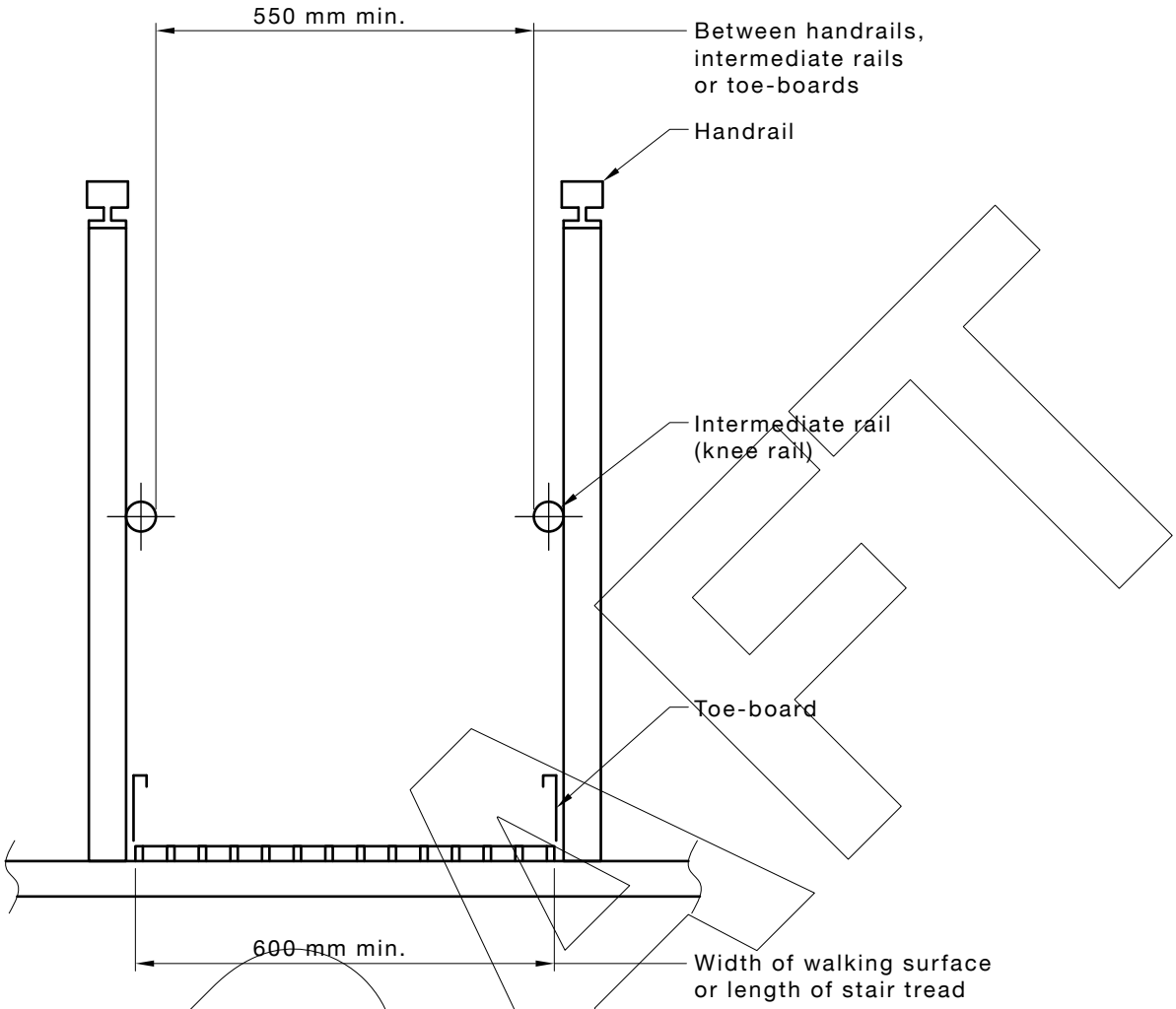

FIGURE 5.1 WALKWAYS WIDTH

5.1.4 Headroom

For headroom requirements, see Clause 3.1.5.

5.1.5 Safety below the walkway

Where persons have access to the area below a walkway, protection complying with Clauses 4.5 and 4.6 shall be provided.

5.1.6 Design and fabrication

The design and fabrication of all walkways shall be in accordance with Section 3.

5.2 DESIGN LOADS FOR WALKWAYS

Walkways shall be designed for the dead load of the designed structure plus one of the following minimum imposed loadings, whichever produces the more adverse effect.

(a) a superimposed live loading of not less than 2.5 kPa uniformly distributed; or

(b) a concentrated loading applied through a 0.01 m^2(100 mm × 100 mm) pad of not less than 1.1 kN at any point;

Where the walkway is likely to incur loads exceeding those given in items (a) or (b) above, reference shall be made to AS/NZS 1170.1 for appropriate imposed loads.

In all cases, the design actions shall be determined using appropriate load factors and combinations of actions according to AS/NZS 1170.0.

5.3 WALKING SURFACES

5.3.1 Installation

Walking surfaces shall be installed in accordance with Clause 4.3.1.

5.3.2 Slip resistance

Criteria for slip resistance are as follows:

(a) Where the angle of slope of the walking surface is less than 10°, the surface shall be slip resistant as described in Clause 3.1.3.

(b) Where the angle of slope of the walking surface is between 10° and 20°, the surface shall be slip resistant as described in Clause 3.1.3 and shall have cleats fitted across the full width of the walking surface at 90° to the direction of travel.

5.3.3 Cleats

Cleats shall be of metal, not less than 10 mm × 10 mm and evenly spaced at the following intervals:

(a) At slope angles >10° to ≤15° ..... 450 mm.

(b) At slope angles >15° to≤18° ..... 400 mm.

(c) At slope angles >18° ..... 350 mm.

5.4 GUARDRAILING

5.4.1 Provision of guardrailing

Continuous guardrailing complying with Clause 6.2.1 shall be installed on all sides and ends of a walkway except in the following situations:

(a) At the points of access from a stairway or ladder or where there is a permanent structure within 100 mm of the edge of the walkway capable of providing protection at least equivalent to that of guardrails.

(b) On the sides and ends of a walking surface that is not more than 300 mm above an adjacent area upon which it is safe to step or stand without risk of injury, and:

(i) the slope of the walkway perpendicular to the direction of travel (cross slope) does not exceed 3°, and

(ii) the angle of slope of the adjacent area is less than 12°, and

(iii) the width of the area adjacent to the walkway is greater than 2000 mm.

NOTE: The surface of the adjacent surface may not be suitable for walking on regardless of the slope. Consequently, a guardrail may still be required to prevent persons from stepping onto this area.

If the angle of slope of the area adjacent to the walkway is 12° or greater, guardrails complying with Clause 6.2.1 shall be installed on the side of the walkway (see Figure 5.2).

5.4.2 Fall protection where the angle of slope is within the range of 15° to 20°

On sloping walkways between 15° and 20°,and on lesser slopes where it is considered a person using the walkway could slip or overbalance and could slide or roll along the sloping surface of the walkway, a means of limiting this linear distance to 18 m should be installed.

A means of preventing a person from sliding or rolling a linear distance more than 18 m may include;

(a) a barrier; or

(b) a landing not less than 2 m in length; or

(c) a change in direction of the sloping walkway of not less than 90 degrees.

5.5 TOEBOARD

A toeboard complying with Clause 6.1.3 shall be installed on the edge of a walkway where there is no permanent structure within 10 mm of the edge, and from which an object could fall to where persons have access to the area below and to the side of the walkway. Any gap between the underside of the toeboard and the walkway surface shall not be greater than 10 mm.

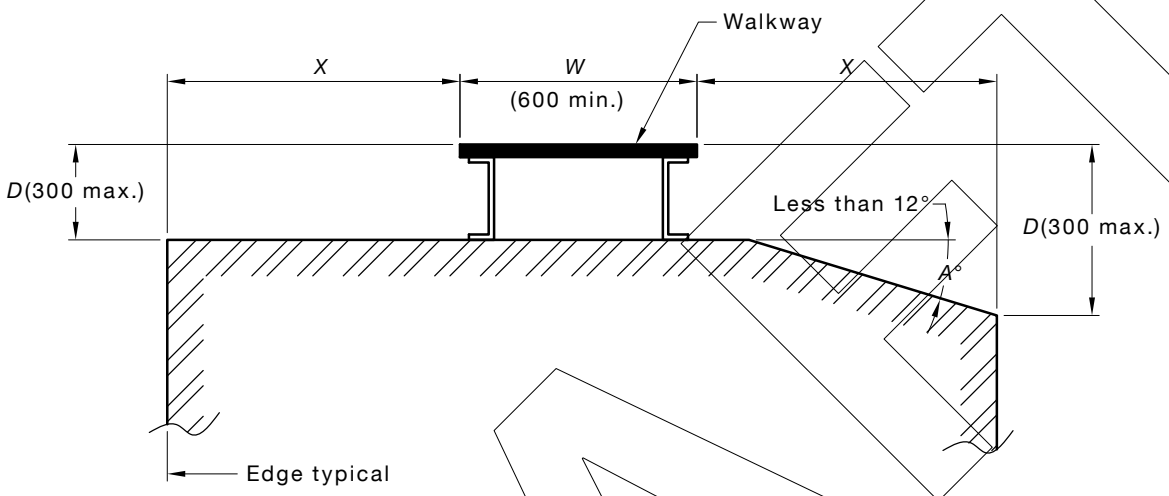

LEGEND:
A° = Angle of slope area
D = Difference in levels
X = Width of area
W = Walkway width

DIMENSIONS IN MILLIMETRES

FIGURE 5.2 GUARDRAIL REQUIREMENTS WHERE ADJACENT SURFACE IS SLOPING

SECTION 6 PHYSICAL EDGE PROTECTION

6.1 DESIGN LOADS

6.1.1 Edge Protection

Guardrails, handrails and intermediate rails (including members and connections that provide structural support) shall be designed to sustain the following imposed actions:

A force of 600 N acting outwards or downwards at any point on the top rail, intermediate rail or post.

A force of 350 N per linear metre acting outwards or downwards on the top rail or intermediate rail.

Wind loading in accordance with AS/NZS 1170.2.

The uniformly distributed load, point load and wind loads are not additive and shall be considered as three separate loading situations. All loads shall be positioned on the member for the worst effect.

No part of the system shall deflect elastically by more than 40 mm under these loads.

6.1.2 Toeboards

A toeboard installed on a platform or walkway shall be designed to withstand a horizontal force of 100 N positioned on the member to achieve the worst effect. The horizontal deflection shall be limited so that the horizontal gap between the inside face of the toe-board and the edge of the walkway or platform does not exceed 10 mm.

Under these loads, no part of the system shall elastically deflect by more than 30 mm.

Further requirements for toeboards are given in Clause 6.2.3.

6.1.3 Infill

Infill that forms part of a guardrail or handrail system, together with members and connections that provide structural support, shall be designed to withstand the greater of following imposed actions:

(a) A horizontal force of 500 N, or

(b) A horizontal pressure of 1 kPa, (external locations) or

(c) Wind loading in accordance with AS/NZS 1170.2 (external locations).

Testing of infill systems is set out in Appendix C.

6.1.4 Testing

Guardrail systems constructed using the materials and dimensions given in Appendix A are deemed to comply with the requirements of this Standard.

All other guardrailings shall be designed and constructed to withstand the design loads given in this Clause 6.1 and type tested, as required, and set out in Clause 6.3.1, in accordance with Appendix B and Appendix C.

6.1.5 Verification and testing

The stipulated design requirements of this standard shall be verified by:

(a) Detailed engineering calculations of the proposed guardrailing design; or

(b) Certified testing applied to the proposed guardrailing; or

(c) Both (a) and (b) for proprietary systems (i.e. designed for sale to third parties) using the testing regime and frequency as required by this clause.

Where testing is used it shall be in accordance with the testing procedure described in Appendix B and also C, where applicable.

When tested in accordance with Appendix B, the connections between the guardrail posts and the supporting structure shall withstand the loads given in Clause 6.1.

6.2 SPECIFIC REQUIREMENTS

6.2.1 Guardrailing

6.2.1.1 *General*

Any part of a guardrailing that could come into contact with the user shall have no sharp edges or other attributes that could cause injury to the user. Where the guardrail does not provide assistance for the user's mobility or stability, a handrail shall also be provided. Where the guardrail is used as a handrail it shall meet the requirements of Clause 6.2.2 and there shall be a minimum hand clearance of 50 mm between the handrail and any adjacent structure.

The height of a guardrail measured vertically above the floor shall be not less than 900 mm. The preferred minimum height is 1000 mm.

NOTE: Requirements for handrails are given in Clause 6.2.2.

6.2.1.2 *Post and rail construction*

Where guardrails are of post and rail construction, the following requirements apply:

(a) they shall consist of a top rail—

  (i) supported by posts at intervals as necessary to meet the specified loading requirements; and

  (ii) parallel to the floor or, where used on a sloping walkway, parallel to the slope of the walkway.

(b) One or more intermediate rails shall be provided parallel with the top rail and spaced such that the maximum clear space between the rails or between the lowest rail and kickboard, where fitted, shall not exceed 450 mm.

(c) Where no toe-board is installed, the clear space between the bottom rail and the floor shall not exceed 560 mm.

(d) Where removable sections of guardrailing are required, the maximum gap between guardrail elements shall be 60 mm max.

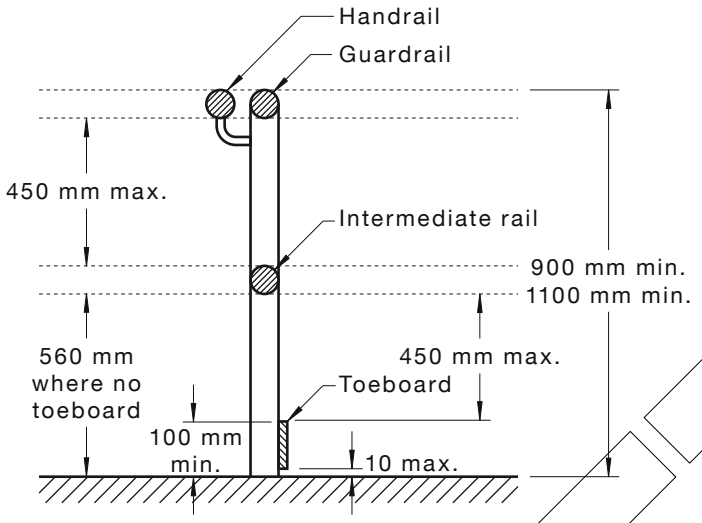

DIMENSIONS IN MILLIMETRES

FIGURE 6.1 GUARDRAIL—KEY DIMENSIONS

6.2.1.3 *Welded mesh construction*

Where guardrailing is constructed from welded mesh, the following requirements apply:

(a) They shall be supported by posts at intervals to meet the specified loading requirements.

(b) Such guardrailing shall be provided with a reinforced top edge and be capable of withstanding the design loads given in Clause 6.1.1.

6.2.1.4 *Infill*

Infill may be constructed from pipe, bar, solid or perforated plate, expanded mesh, weldmesh or other material providing performance characteristics considering strength, sharp edges and opening sizes.

NOTE: Pipes or bars may be arranged in any orientation provided that any space between the pipes or bars does not exceed 450 mm, and the area of such openings does not exceed 0.2 m^2.

Expanded metal shall have no sharp edges. Where metal mesh is used, a rigid rail shall be provided as the top rail. Alternatively, the mesh shall be reinforced on the top edge to provide performance equivalent to a top rail.

NOTE: Metal mesh may be welded wire, chain or woven.

6.2.2 Handrails

6.2.2.1 *General*

Handrails shall be designed and constructed in accordance with the requirements of this Clause.

Handrails shall have no sharp edges or splinters present which would cause injury to users.

6.2.2.2 *Metal handrails*

Where circular metal handrails are provided, they shall be not less than 30 mm and not greater than 65 mm external diameter.

NOTE: Other sections such as square, rectangular or angle may be used, providing that loading requirements are met.

6.2.2.3 *Rectangular handrails*

Where square or rectangular handrails are provided, the sum of height and width shall be within the range 60 mm to 100 mm.

NOTE: Other sections may be used, using the above dimensions as a guide.

6.2.2.4 *Height*

The height of a handrail measured vertically above the floor or stair tread shall be not less than 1000 mm or greater than 1100 mm.

6.2.2.5 *Hand clearance*

There shall be a hand clearance between the edge of the handrail and any adjacent structure of not less than 50 mm, as shown in Figure 6.2.

The handrail shall be supported to permit unrestricted movement of the user's hand along the upper surface.

6.2.3 Toeboards

A toeboard complying with Clause 6.1.3 shall be installed where required by Clause 5.5 and shall be firmly attached to the posts or the floor. Any gap between the toeboard and the floor shall not exceed 10 mm, and the top of the toe-board shall be not less than 100 mm above the floor.

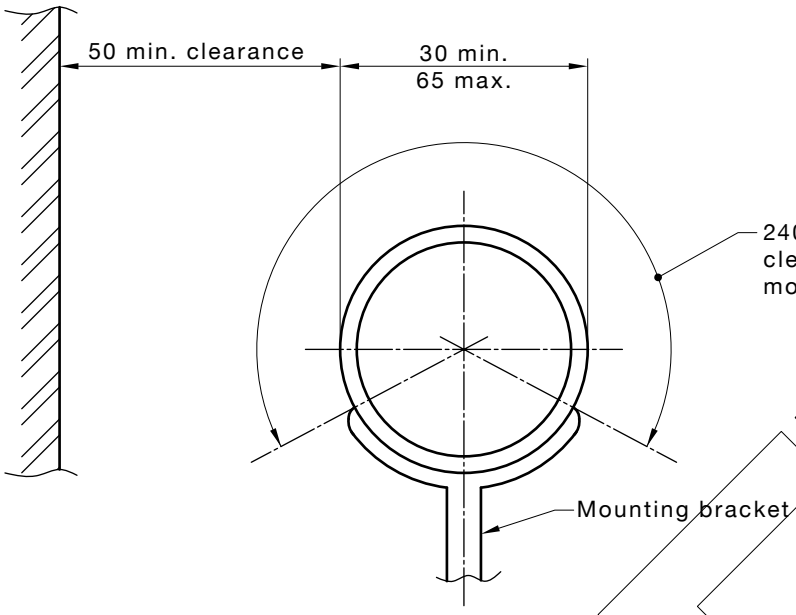

(a) Circular handrails

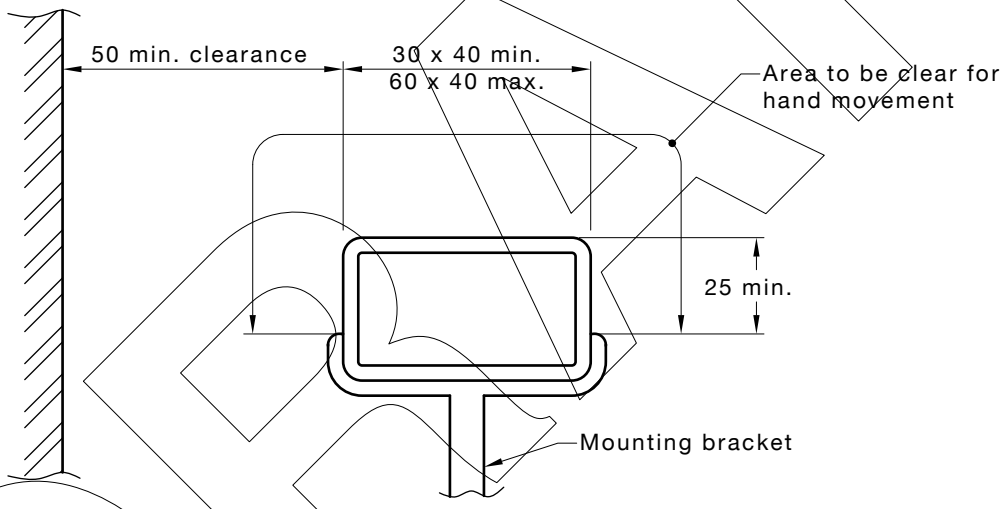

(b) Rectangular handrail

DIMENSIONS IN MILLIMETRES

FIGURE 6.2 DIMENSIONS OF HANDRAILS

SECTION 7 ACCESS BETWEEN LEVELS

7.1 DESIGN LOADS

7.1.1 Stairways

Stairways and integral landings shall be designed for the dead load of the stairway structure plus a superimposed live loading of not less than 2.5 kPa uniformly distributed on each tread and landing. A maximum deflection of L/200 in the horizontal length of the stairway including landings, where connected, is permitted.

Where the stairs are likely to be loaded in excess of the above requirements, the design loading shall be based on the requirements of AS/NZS 1170.1 for imposed actions.

Treads shall be designed for a distributed loading of at least 2.2 kN per linear metre of stair tread width or a concentrated loading of not less than 1.5 kN applied through a 100 mm × 100 mm steel pad, whichever loading produces the more adverse effect.

In all cases the design actions for stairways shall be determined using load factors and combinations of actions according to AS/NZS 1170.0.

Verification and testing shall comply with Clause 5.6.5.

7.1.2 Fixed ladders

7.1.2.1 *Twin stile ladders (step type or rung type)*

The twin stile ladder and its fixings shall be designed to withstand a concentrated live loading to rungs or treads of not less than 1.5 kN for each 3 m of vertical height within the same ladder flight. Where the ladder is inclined to the horizontal is shall have a maximum deflection of L/200 on the horizontal span.

Each rung shall be designed to withstand a point load of 1.5 kN at the centre of its span and shall be not less than 20 mm outside diameter.

NOTE: The 20 mm diameter requirement is to ensure adequate handgrip. As is now common in temporary aluminium ladders, the rungs may be shaped with a flatter top to assist with more comfortable and safer loading of user's footwear.

Verification and testing shall comply with Clause 5.6.5.

7.1.2.2 *Single stile ladders*

A single stile ladder and its fixings shall be designed to withstand a concentrated live loading of not less than 1.5 kN per rung for each 3 m of vertical height within the same ladder flight. Where the ladder is inclined to the horizontal is shall have a maximum deflection of L/200 on the horizontal span.

Each rung shall be designed to withstand a force of 1.5 kN applied at a point 50 mm from the outside end of the useable rung length (see Figure 7.1) and shall be not less than 20 mm outside diameter.

Verification and testing shall comply with Clause 5.6.5.

7.1.2.3 *Individual-rung ladders (step-irons)*

A step-iron and its fixings shall be designed to withstand the specified loading and deflection requirements in EN 13101.

7.1.2.4 *Design Actions for Fixed Ladders*

In all cases the design actions for twin stile and single stile ladders shall be determined using appropriate load factors and combinations of actions according to AS/NZS 1170.0. Individual-rung ladders (step-irons) shall comply with EN 13101 and Clause 7.7 of this Standard.

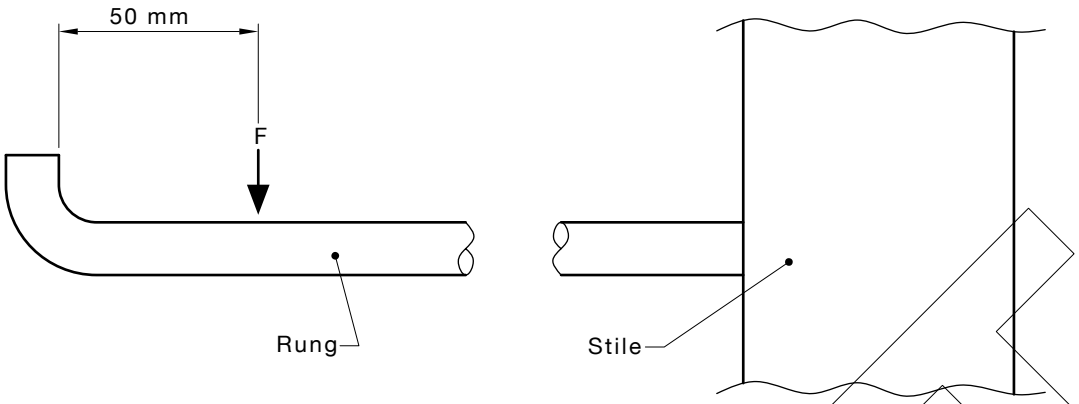

FIGURE 7.1 FORCE APPLICATION POINT FOR SINGLE STILE LADDER

7.2 STAIRWAYS

7.2.1 Width and angle of slope

Stairways shall be not less than 600 mm wide, measured between the inside edges of the stiles. The clear space between handrails and midrails shall be not less than 550 mm. The angle of slope between the stiles and the horizontal shall be not less than 20° and not greater than 45° (see Figure 7.3).

NOTE: The preferred range of angle of slope is between 30° and 38°.

7.2.2 Flights

The number of risers in a flight shall be not less than two and not greater than 18. Where there is more than one flight, adjacent flights shall be connected by a landing complying with Clause 7.2.4.

A means of preventing a person from falling more than 36 risers shall be provided this includes—

(a) a barrier; or

(b) a landing not less than 2 m in length; or

(c) a change in direction of the stairway of not less than 90°.

7.2.3 Stairs

7.2.3.1 *Treads*

Flooring materials for treads shall comply with Clause 3.2.3. The surface of every tread shall extend across the full width of the stairway and the tread surface shall be slip-resistant.

7.2.3.2 *Risers and goings*

All rises and all goings, in the same flight of stairs, shall be on uniform dimensions within a tolerance of ±5 mm.

NOTE: In some cases it may be necessary to modify the landing at the base of the stairway to achieve uniformity in the rises.

A rise (R) shall be not less than 130 mm and not greater than 225 mm.

The going (G) shall not be less than 215 mm or greater than 355 mm and shall be not greater than the actual tread depth plus a maximum gap of 30 mm between the rear edge of one tread and the nosing of the tread above.

The combination of twice the rise plus the going (2R + G) shall be not less than 540 mm, and not greater than 700 mm (i.e. $540 \leq R + G \leq 700$).

7.2.3.3 *Headroom*

For headroom requirements, see Clause 3.1.5.

7.2.3.4 *Nosing*

The nosing shall be such that the edge of the tread is clearly visible against the background, especially where the stairs could be used in a variety of lighting conditions.

7.2.4 Landings

Any landing at a point of access to the stairway, and any intermediate landing in the stairway, shall be designed and constructed in accordance with the requirements of Clauses 4.2 and 4.3 and the following:

(a) The length of the landing shall be not less than 600 mm.

(b) The width of the landing shall be not less than the width of the stairway.

(c) The landing shall have minimum headroom of 2000 mm.

(d) Every access landing shall provide standing space of at least 600 mm clear of cross-traffic or door swing.

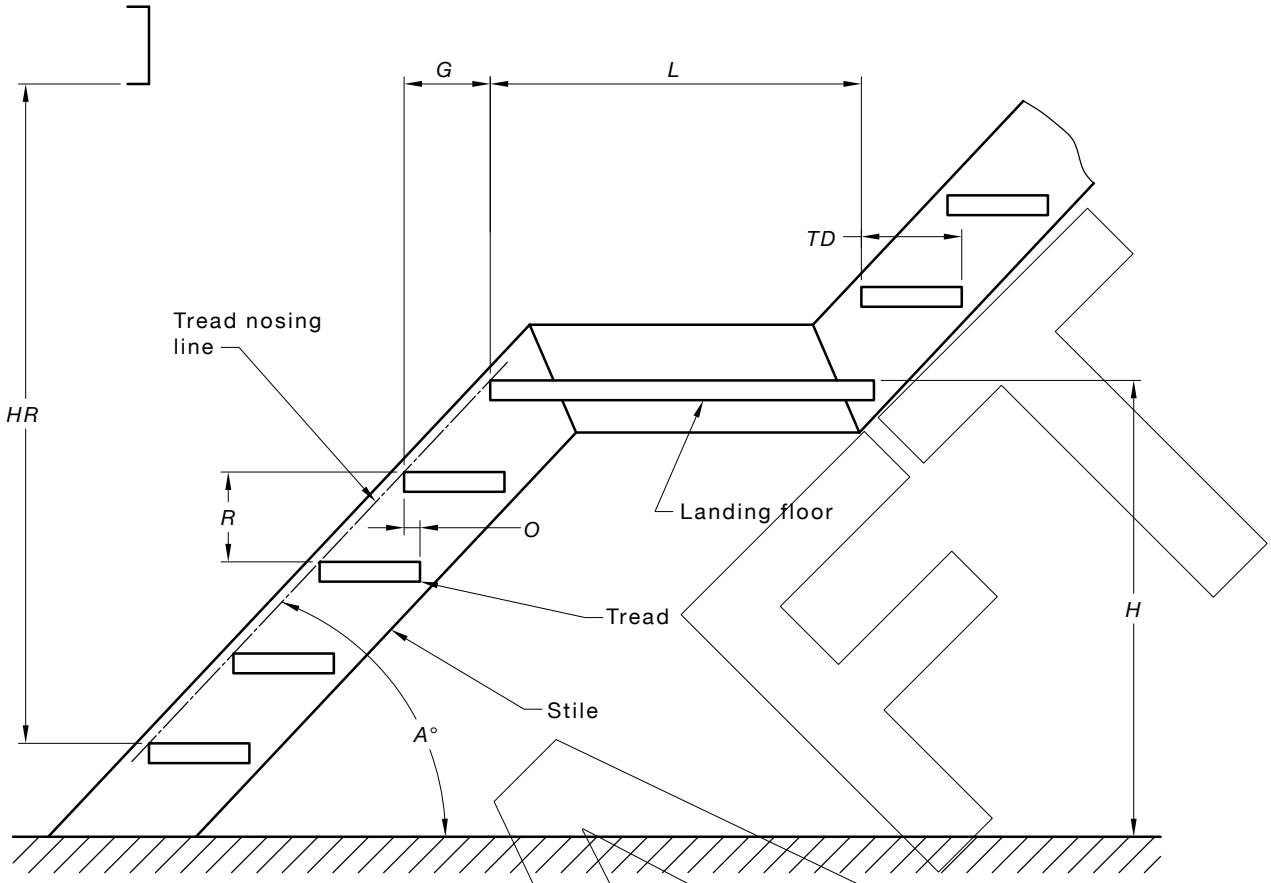

LEGEND:

A = Angle of stair: angle between the tread nosing line and the horizontal.

G = Going: the horizontal distance between the nosing of two consecutive treads.

H = Height: the vertical distance between two horizontal elements.

HR = Headroom

L = Landing: a horizontal element at the top, bottom or any intermediate position in a stair.

O = Overlap: the horizontal distance a tread nosing projects over the tread below.

R = Rise: the vertical distance between the top surfaces of two adjacent treads.

TD = Tread depth: G + O (min.)

VC = Vertical clearance: the vertical distance from the nose of a tread to the underside of any object above.

FIGURE 7.2 STAIRWAY TERMINOLOGY

7.2.5 Guardrailing

Except where there is a fixed structure within 100 mm of the stairway stile, stairways and stairway landings shall be provided with guardrailing on any exposed side.

Guardrailing shall comply with the requirements of Clauses 6.1.1 and 6.2.1. The requirement for a toeboard (as described in Clause 6.1.3) shall apply only to the sides of stairway landings.

7.2.6 Handrails

Every stairway shall be provided with at least one handrail that is continuous between stair flight landings and have no obstruction on or above them that will tend to break a handhold.

Where the width of the stairway exceeds 1000 mm, a handrail shall be provided on each side.

On adjacent flights of stairs, where the gap between handrails is 100 mm or greater, a continuous rail shall be provided to close the gap between handrails and midrails (see Figure 7.4). Where the gap between the handrails is less than 120 mm, a continuous handrail or vertical closure bends shall be used.

PUBLIC COMMENT NOTE — Ladder issues

The drafting committee has had difficulty dealing with the issue of falls protection on all types of ladders – this issue having a large effect on 4 distinct areas:

(a) The selection of ladder type

(b) The slope of the ladder

(c) The spacing of landing platforms, and

(d) The type of fall protection (cage or harness based) provided, when required.

A compromise has been reached in the draft and various other highlights have been noted requesting public comment on specific points.

The drafting committee has taken the view that ladders are a relatively low order control and that they progressively become less safe as they become more vertical and in cases where adequate landings cannot be provided due to site constraints,

On the issue of physical falls prevention, the drafting committee has weighed the issue of cages providing a passive control (ie. The users requires little training and supervision) vs harness based systems where the outcome may be more positive but the reliability of the system decreases unless a range of additional factors (ie. Training, supervision, on-going service, rescue capability etc) are in place to support the installation.

ISO 14122.4 contains some relevant information on the application and use of ladder cages in various configurations.

Public comment is sought on this philosophy and of the principles adopted in drafting the section in relation to ladder selection, slope, landing spacing's and falls protection.

7.3 STEP-TYPE LADDERS

7.3.1 Width and angle of slope

The width of the ladder between the stiles or handrails shall be not less than 450 mm but not greater than 750 mm.

The angle of slope of step-type ladders shall comply with Section 2.

7.3.2 Ladder enclosures

Where a person could fall more than 6 m, the ladder installation shall be fitted with a side screen, or a ladder cage (refer to Section 7.4.6), or other type of enclosure to prevent a sideways fall from the ladder.

NOTES:

1 The side screen shall be constructed and mounted to provide a minimum 50 mm clear space from the ladder handrail to any part of the screen, except where it is fixed to the ladder.

2 The side screen, measured from its outermost corner shall start at a maximum height of 1100mm above the lower landing and extend to a minimum of 1000 mm above the top landing

3 The depth of the side screen, measured perpendicular from the ladder stile, shall be a minimum of 750mm for a ladder slope of 70 degrees to 900 mm for a ladder slope of 60 degrees.

4 The side screen shall contain members or infill such that a 200 mm diameter sphere cannot pass through.

5 The side screen, together with members and connections that provide structural support, shall be designed to sustain an imposed action of 600 N, applied through a 100 mm x 100 mm rigid pad, and acting at any point and in any direction on the side screen.

6 Provision should be made to ensure persons descend a step-type ladder while facing the ladder, e.g. by means of durable warning signs.

7 Side screens may be fitted to one side only or to both sides of the step ladder, as required.

7.3.3 Treads

7.3.3.1 *Dimensions of treads*

Treads shall be not less than 100 mm deep. The surface of every tread shall be slip-resistant. The dimensions of all treads and of all risers in the same ladder shall be uniform and within a tolerance of ±5 mm.

7.3.3.2 *Spacing of treads*

Treads shall be equally spaced at distances not less than 200 mm, or greater than 250 mm apart. All tread spacings shall be uniform and within a tolerance of ±5 mm or better. The preferred tolerance is ±2 mm where achievable. The top tread shall be level with, or be integral with, the landing.

7.3.4 Handrails

Handrails complying with Clauses 6.1.2 and 6.2.2 shall be provided on each side of the ladder. The clear space between the handrails shall be not less than 550 mm or greater than 750 mm.

The clear distance, at 90 degrees to the slope of the ladder, between the handrails and the plane through the nosing of the tread shall be not less than 150 mm.

The bottom of the handrails shall commence at a point no more than 900 mm above the landing (see Figure 7.5).

NOTE: Where the handrails of a step-type ladder are joined to the handrail of a walkway or platform, either of the following options should be used:

(a) The handrails should be blended to form a smooth transition to allow continuous contact with the handrail while moving from ladder to walkway or platform.

(b) Alternatively, handrails should be located to—

(i) permit an uninterrupted hand passage along the handrail surface until the user has reached the walkway or platform;

(ii) ensure a clearance of not less than 50 mm between the handrail surface and any adjacent structure that could contact the user's hand;

(iii) ensure that any gap measured between the ends or components of the handrails does not exceed 100 mm measured horizontally;

(iv) follow the slope of the ladder;

(v) avoid the need for direction changes of a magnitude that might affect the user's stability; and

(vi) ensure the strength of rails and posts is not adversely affected.

7.3.5 Clearances

Clearances between the ladder and all permanent objects that are not part of the ladder installation shall be at least the following:

(a) From the nosing of the tread, 150 mm (see Figure 7.5).

(b) In front, from the nosing of the tread measured at 90° to the slope of the ladder, 900 mm when the ladder is inclined at 70° to the horizontal, increasing proportionally to 1000 mm when the ladder is inclined at 60° to the horizontal.

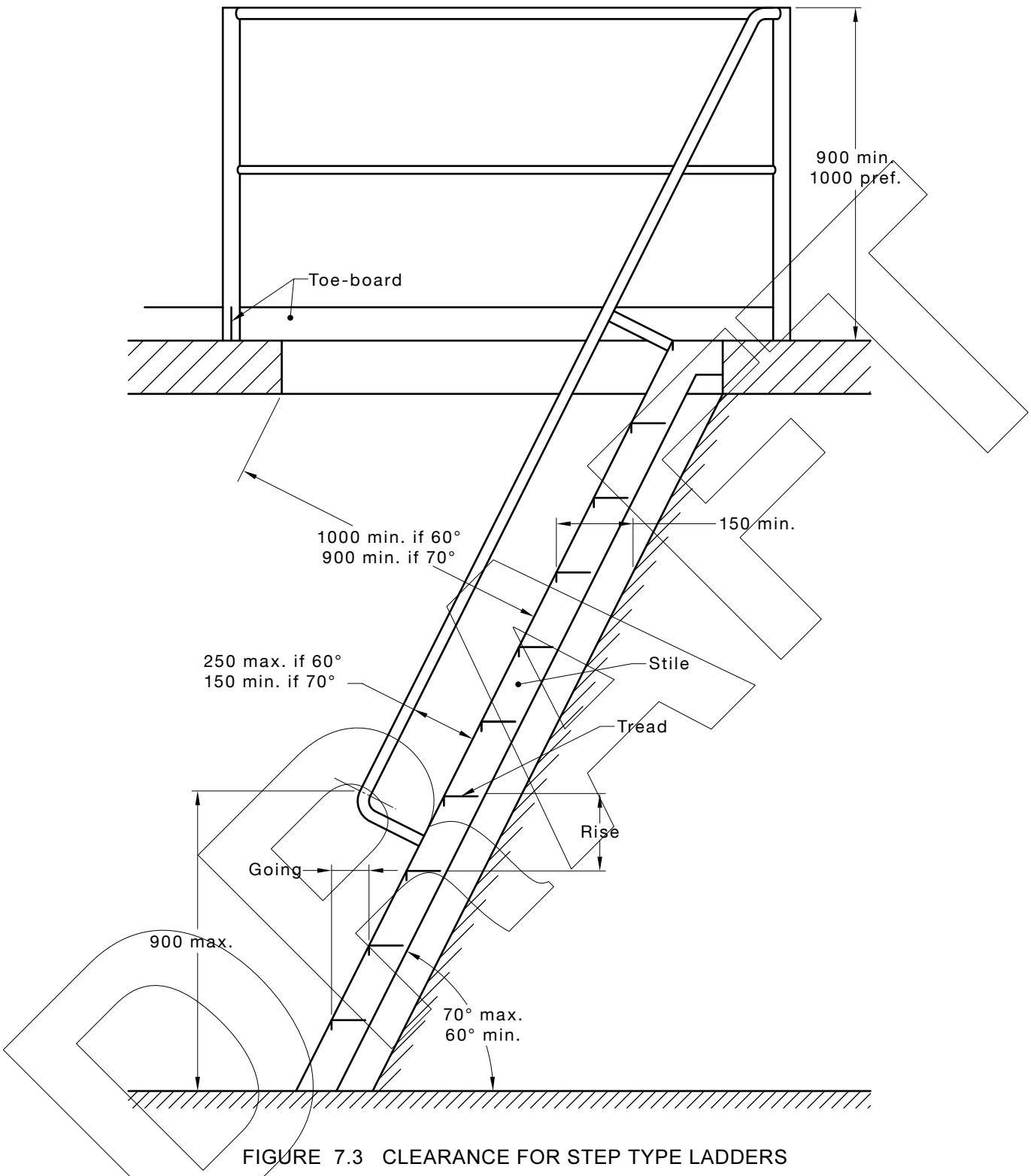

FIGURE 7.3 CLEARANCE FOR STEP TYPE LADDERS

7.3.6 Distance between landings

The vertical distance between landings shall not exceed 6 m. Where the vertical height of the installation exceeds 6 m, and the installation consists of more than one ladder, successive ladders shall—

(a) change direction by 180 degrees at each landing; or

(b) be staggered at each landing level;

The minimum length of the associated landing shall be not less than 900 mm horizontally from the front of the ladder.

Where staggering or a change of direction of 180 degrees is not possible, other means, e.g. a barrier, a landing not less than 1.5 m long or a harness based fall protection complying with AS/NZS 1891, shall be provided to prevent a person falling more than 6m

NOTES:

1 The purpose of the landing is to limit the distance that a person would fall.

2 The vertical distance between landings in multiple-flight ladders should be equal.

7.4 TWIN-STILE RUNG-TYPE LADDERS

7.4.1 Angle of slope

The angle of slope of twin-stile rung-type ladders shall be in accordance with Clause 2.2(e).

7.4.2 Stile width

The clear width between stiles shall be not less than 375 mm and not greater than 525 mm.

7.4.3 Rungs

7.4.3.1 *General*

The surface of rungs shall be slip resistant, e.g. corrugated, serrated, knurled, dimpled, or coated with a slip-resistant material.

Rungs shall be not less than 20 mm diameter.

NOTE: The size and shape of the rung surface will also affect the comfort and therefore the safety of persons using the ladders for extended periods. The maximum practicable rung surface is desirable, taking into account the ability to grip the rung by hand.

Where the ladder is of steel construction, the completed ladder shall be either hot-dip galvanized or treated with an effective corrosion preventive material appropriate to the location.

NOTE: The corrosion-preventive treatment should not adversely affect the slip resistance of the working surfaces.

7.4.3.2 *Spacing of rungs*

Rungs shall be spaced as follows:

(a) For ladders having a length of greater than 1 m, a rung spacing of not less than 250 mm, or greater than 300 mm.

(b) For ladders having a length of less than or equal to 1 m, rungs shall be evenly spaced but not greater than 300 mm apart.

The dimensions of all rungs and the distance between rungs in the same ladder shall be uniform and within a tolerance of ±5 mm or better. The preferred tolerance is ±2 mm where achievable.

DRAFTING NOTE: The Committee seeks comment (either positive, negative or alternative) on this proposal to enable a final decision to be made following the public comment phase.

The drafting committee of AS 1657 is seeking a public comment regarding the possibility of allowance of some limited variation in ladder rung or tread spacing's at ladder extremities and, in addition, allowance of a small degree of cross-slope at the base of a rung type or step type ladder.

The issue has come about due to the industry's increasing use of modular ladders in lieu of made to measure ladders. While not wishing to compromise site safety, the committee has considered the possibility of variations in a limited capacity, to assist manufacturers and installers.

These variations would apply to all rung ladders, including short rung ladders, and to step type ladders. While still preferring accuracy in installation dimensions, the proposed variations would be as follows.

7.4.3.3 Top rung/tread spacing

The top rung/tread to top landing (measured from the top face of the rung or tread) allowable variation, would be 'x' (the rung spacing with a manufacturing tolerance of plus/minus 2 mm) plus 0% (zero) and minus up to 20%.

7.4.3.4 Bottom rung/tread spacing

At the base of the ladder, the allowable variation would be 'x' (as above) plus 0% (zero) and minus 10%, measured from the top of the rung to the bottom landing – this dimension should be measured at the ladder centreline where the landing has a cross-slope (in the cross direction – see below).

7.4.3.5 Allowable cross slope at base of ladder

7.4.3.5.1 General

A bottom landing cross slope of up to 7° total would be acceptable to cater for a typical low slope surface for the bottom landing (e.g. a roof) without the need for a levelling platform.

At all points along the ladder a clearance of 200 mm from the rear of any rung, or 150 mm from the front of any tread, measured to a rear face adjacent to the ladder, shall be maintained for toe clearance.

NOTES:

1 The variation allowances in this Clause and the rung/step spacing tolerance allowances referred to elsewhere are not the same thing – the tolerance is a manufacturing allowance and is not intended to be cumulative. The allowable variations are dimensions that may be varied intentionally by the design.

2 The allowable cross slope shown is a maximum – the preferred position is for the bottom landing at the ladder base to be level where possible. In some cases, it may be necessary to provide a separate bottom landing platform and in such cases, additional attention may need to be given to potential trip hazards, visibility of edges and the like.

7.4.4 Fastenings

The ladder shall be secured with fastenings at the top and at the foot of the ladder, and shall be secured at intervals in order to comply with Clause 7.12.

The design loads on the ladder (refer to Section 7.1) shall determine the type and distance between the fastenings.

NOTE: The ladder should be secured at intervals in order to minimize lateral swaying.

7.4.5 Clearances

Clearances between the ladder and all permanent objects that are not part of the ladder installation shall be as shown in Figure 7.6 and at least the following:

(a) At the back edge of the rung 200 mm.

(b) In front, from the nosing of the rung measured at 90° to the ladder, 750 mm when the ladder is vertical or inclined at not less than 70° to the horizontal.

(c) At the sides 350 mm from the centre-line of the ladder, except as provided in Item (d) below. From a line drawn from the stile at an angle of not less than 135° to the front of the rung. Refer to Figure 7.6.

(d) The hand clearance for stiles shall be not less than 50 mm.

Where a ladder is provided with a cage, the minimum clearance dimensions specified in Items (b) and (c) above shall be modified in accordance with the requirements of Clause 7.4.6.

7.4.6 Distance between landings

The vertical distance between landings shall not exceed 6 m. Where the vertical height of the installation exceeds 6 m, and the installation shall consist of more than one ladder, successive ladders shall—

(a) change direction by 180 degrees at each landing; or

(b) be staggered at each landing level;

The minimum length of the associated landing shall be not less than 900 mm horizontal from the front of the ladder.

Where ladders are staggered, they shall be spaced with a minimum centreline to centreline dimension of 700 mm.

Where staggering or a change of direction by 180 degrees is not possible, other means, e.g. a barrier, a landing not less than 1.5 m long or harness based fall protection complying with AS/NZS 1891, shall be provided to prevent a person falling more than 6m .

NOTE: The vertical distance between landings in multiple-flight ladders should be equal.

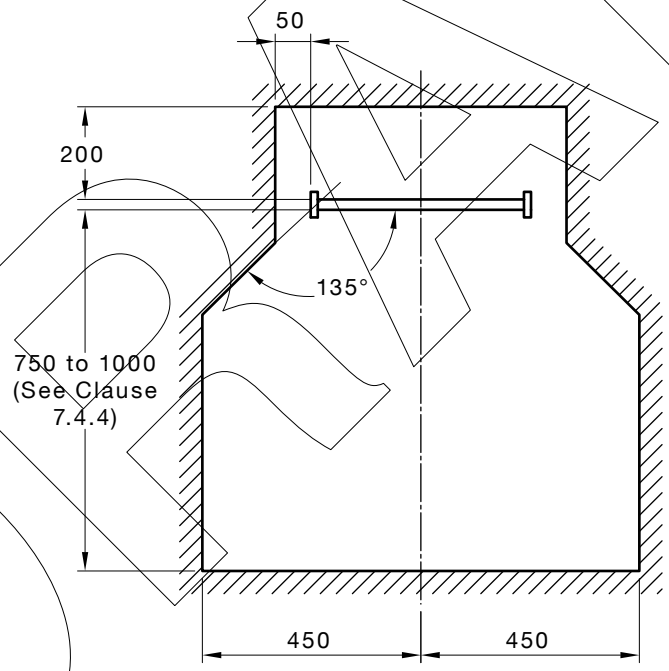

DIMENSIONS IN MILLIMETRES

FIGURE 7.4 MINIMUM CLEARANCES FOR RUNG-TYPE LADDERS

7.4.7 Ladder cage

Dimensions shall be as set out in Figure 7.8.

A ladder cage complying with this clause shall be provided where;

(a) a person could fall more than 6m from a rung type ladder, irrespective of landings; and

(b) there is no separate provision made for fall protection complying with AS/NZS 1891

NOTE: The calculation of potential fall from the ladder should take account of not only a vertical fall but additionally, the potential for a continuing fall past a lower landing.

Where a ladder cage is provided, it shall comply with the following (see also Figures 7.7 and 7.8):

(i) The inside of the cage shall be free from projections.

(ii) The ladder cage shall be constructed so that any opening does not permit a 150 mm sphere to pass through it.

(iii) The cage shall extend not less than 1000 mm or to the height of the guardrail (if provided) above the top of the platform landing.

(iv) The bottom of the cage shall terminate not less than 2 m or more than 2.2 m above the base of the ladder, with a preferred minimum of 2100 mm.

NOTE: The bottom portion of the cage may be flared out and can also extend to any adjacent guardrails.

(v) Where the bottom of the ladder terminates at a platform fitted with guardrailing that is less than 900 mm from the front of the ladder or from the centre of the ladder to either side, the area between the cage and the top of the guardrailing shall be guarded.

(vi) The rear half of the cage shall be approximately semicircular. The sectional dimensions of the cage shall provide an internal width of 700 mm and a clearance of 750 mm between the back of the cage and the front of the rungs, measured at 90° to the slope of the ladder.

(vii) Cage hoops shall be constructed of minimum 50 mm × 5 mm low carbon steel flat or an equivalent component having comparable performance spaced at not more than 2000 mm centres. As a minimum, cage verticals shall be—

(A) 25 mm × 5 mm low carbon steel or an equivalent component having comparable performance, spaced in accordance with Item (b) above; or

(B) welded wire mesh not less than 3 mm thick, with openings not exceeding 100 mm × 100 mm; or

(D) chain mesh, supported by at least seven vertical bars around the circumference of the cage.

NOTE: In the context of Items (vii) 'comparable performance' is in relation to bend strength, rigidity and safety. For example, a hoop constructed from a thin section could introduce a cutting or severing hazard.

PUBLIC COMMENT NOTE:

The following figure shows an alternative method of mounting of cage elements and ladder connections to the structure. The detail shown in the 1992 version of the Standard was designed to allow hands unimpeded access to stiles over their full length but led to a detail that was inflexible (in design), costly to produce and led to excessive movement of cages in windy conditions. The proposed amended detail is simpler but has the slight disadvantage of the hands needing to be progressively removed from the stile (when not climbing by holding rungs) and re-gripping.

Public comment is sought on the advisability and practicality of this proposed change.

Additionally, the proposal shows welded connections only. Comment is sought on the possibility of bolted or welded connections.

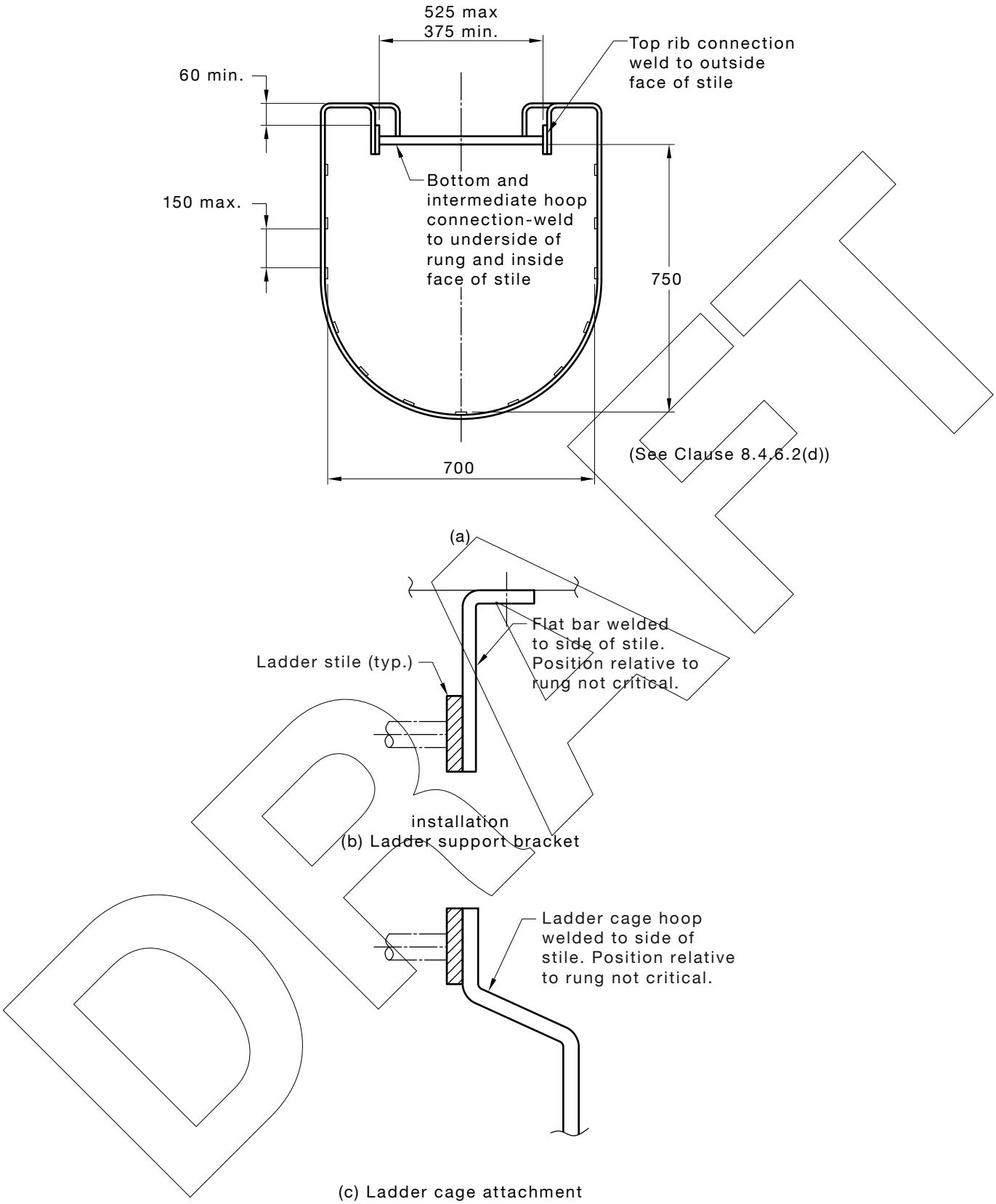

DIMENSIONS IN MILLIMETRES

FIGURE 7.5 CLEARANCES AND MOUNTING DETAILS FOR LADDER CAGES

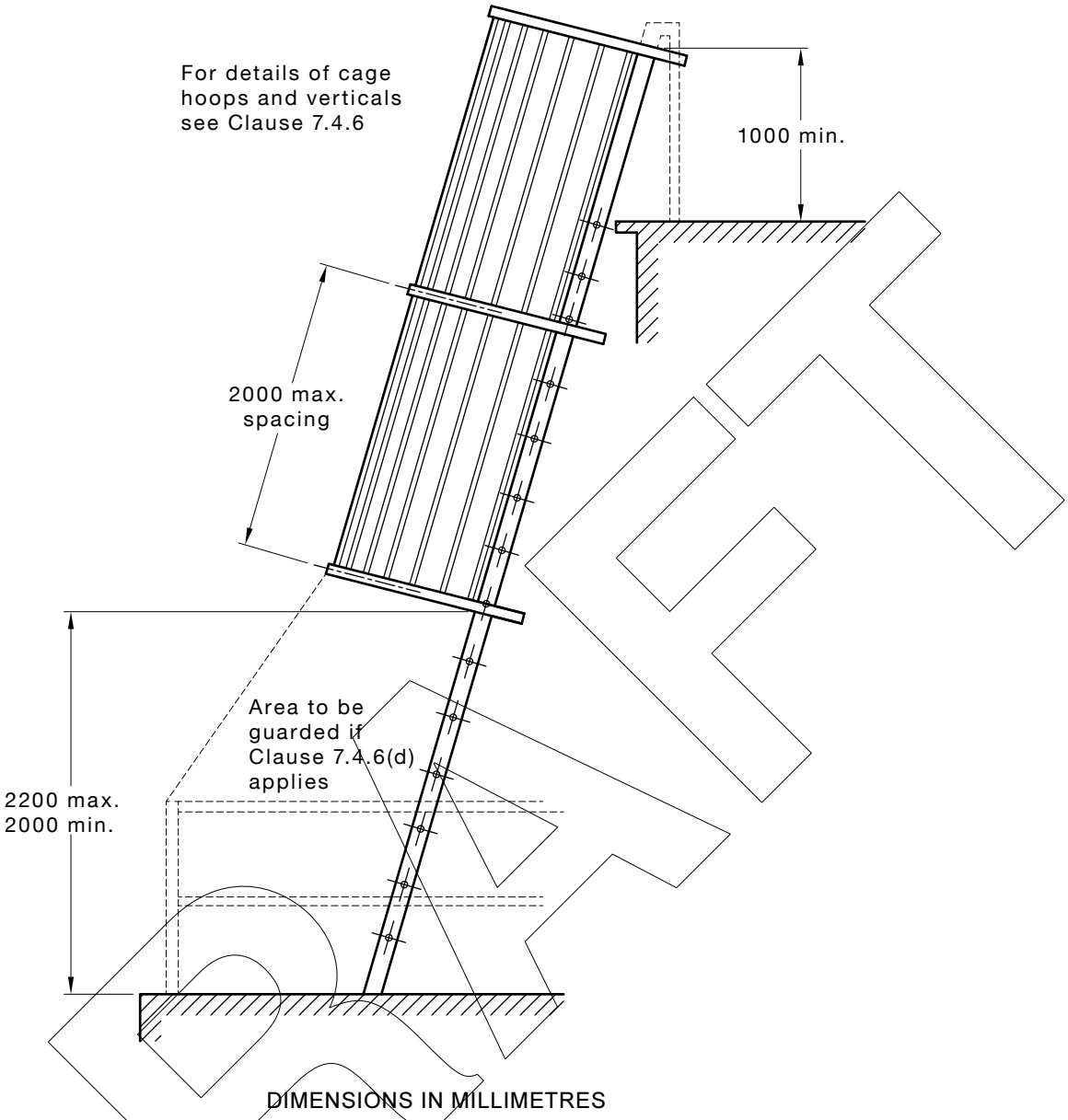

FIGURE 7.6 LADDER CAGE—KEY DIMENSIONS

7.4.8 Extension above landings

7.4.8.1 *Step-through ladders*

Where it is necessary for a person to step through a ladder, the stiles shall extend at least 1000 mm above the top landing.

The width between the extended stiles at the top shall be at least 550 mm but not more than 675 mm (see Figure 7.9). Stile strength and load capacity shall be consistent with the ladder. The maximum deflection of the extended stiles shall be limited to Ls/100, where Ls is the length of the extended stile and the imposed action is a force of 600N acting outwards at 900 to the slope of the ladder and positioned at the top of the extended stile.

NOTE: Care should be taken to ensure the extended stile has adequate lateral stability

The top rung shall be level with, or one full rise below, the landing. (For stile clearance, see Clause 7.4.4.).

Except at points where the cage is attached, hand clearances around the stiles shall be maintained at 50 mm.

NOTE: The landing may extend to the top rung, or there may be a gap of not greater than 100 mm between the top rung and the landing.

7.4.8.2 *Side access ladders*

Where it is necessary for a person to step sideways from a ladder, the ladder stiles and rungs shall extend at least 1000 mm above the top landing.

The horizontal distance from the ladder stile to the landing shall be 175 mm to 300 mm.

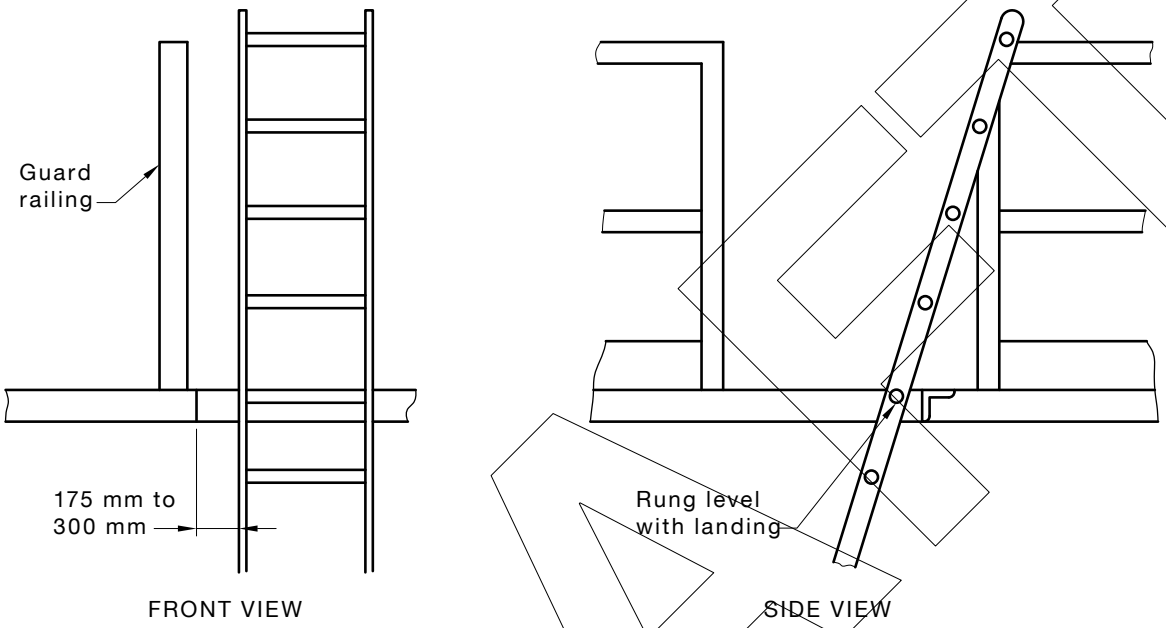

FIGURE 7.7 SIDE ACCESS LADDERS

7.4.8.3 *Access through horizontal openings*

When access is provided through a horizontal opening, e.g. through a roof access hatch—

(a) the stiles or handrails shall extend at least 1000 mm above the opening; or

(b) handgrips above the level of the opening shall be provided.

NOTE: Where access is provided through an opening that is normally kept closed, the stiles or handrails may be terminated below the opening and handgrips mounted above.

Where it is necessary for a person to open a trapdoor while standing on a ladder, provision shall be made for opening and closing the roof access hatch by remote means, or by the use of one hand.

Where it is necessary for a person to extend the stiles or handrails while standing on a ladder, provision shall be made for performing this task by remote means, or by the use of one hand.

7.4.8.4 *Ladder landing*

Ladder landings shall be level and extend forward to at least the projected line of the rear of the stile.

The foot of the ladder shall rest on, or terminate above, the landing.

The width of any landing shall be at least 600 mm. (See Clause 7.2.4 and 7.4.5 for dimensions of landings.)

Every access landing shall provide standing space at least 600 mm clear of cross traffic or door swing, or any other structure. Ladder landings shall have minimum headroom of 2000

m. Where the ladder joins a landing, the landing shall extend out to the point where the top rung lies (see Figure 7.10).

7.4.9 Handrails

Handrails, projecting out towards the user, shall not be used on twin-stile rung-type ladders.

NOTE: This requirement is to discourage users from moving their centre of gravity further away from the rungs by gripping the handrails.

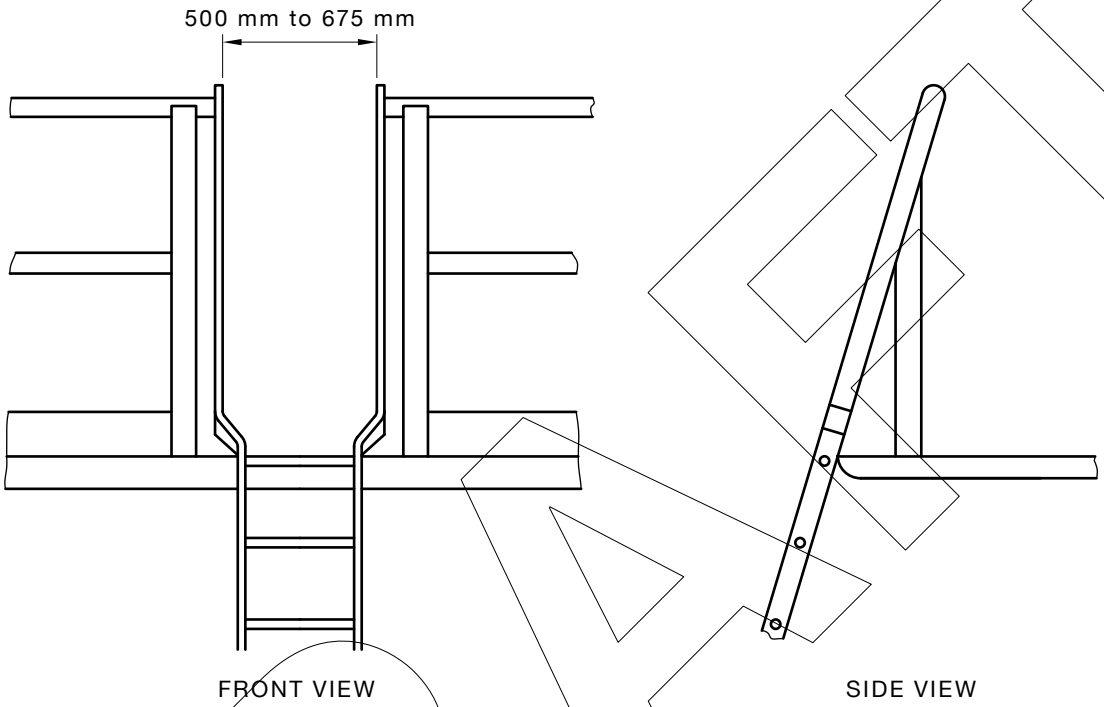

FIGURE 7.8 STILES FOR STEP-THROUGH LADDERS

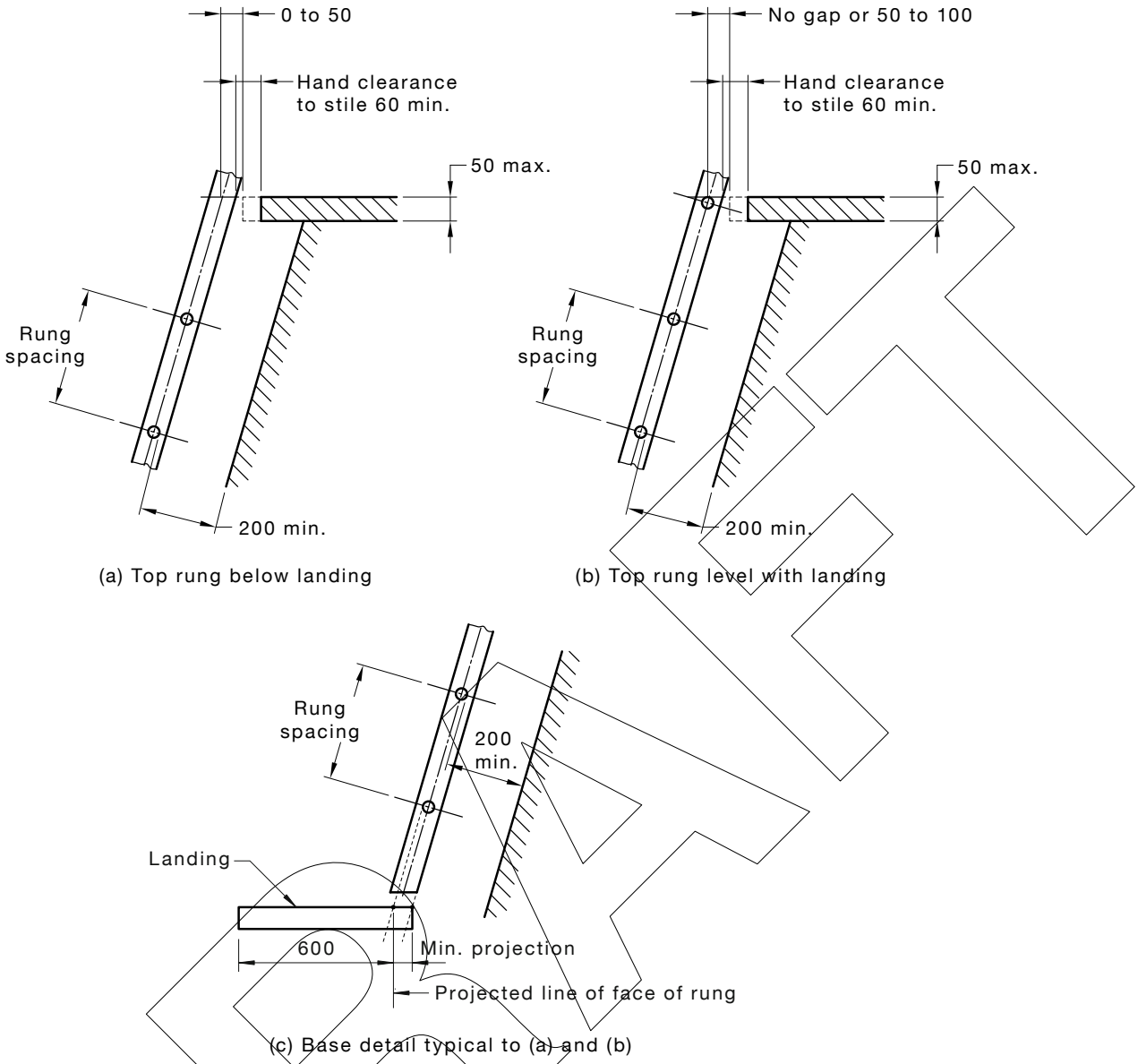

FIGURE 7.9 GAP BETWEEN LANDING AND LADDER

7.5 SINGLE-STILE RUNG-TYPE LADDERS

7.5.1 Angle of slope

The angle of slope shall be not less than 85 degrees to the horizontal. In no case shall the ladder overhang the person climbing the ladder.

7.5.2 Stile cross-section

Central stiles shall not exceed 80 mm in width on the front face.

Other cross-sections providing adequate strength may be used, taking into account that stile is generally used to support rungs and act as the runner for a harness based fall arrest system and as such, needs to be rated for fall arrest fall loads.

7.5.3 Rungs

7.5.3.1 *General*

Rungs for single-stile ladders shall comply with the requirements of Clause 7.1.2.3. The following requirements and recommendations also apply:

(a) Rungs shall be not less than 20 mm outside diameter.

NOTES:

1 Cross sections other than circular are permitted and slip-resistant surfaces are recommended.

2 Rungs should provide a comfortable surface upon which to stand

(b) Rungs shall be securely fastened to the stile (e.g. by welding or swaging). In highly corrosive areas, rungs should be completely sealed at the point where they enter or make contact with the stiles.

(c) The point of attachment of the rung to the stile shall be smooth and free from projections likely to cause injury to the hands or legs.

(d) Rungs shall be of the same level on both sides of the stile and shall be upturned at the ends for at least 25 mm (see Figure 7.11). The clear width between the upturned ends of the rungs shall be at least 375 mm but not greater than 550 mm.

7.5.3.2 *Rung spacing*

Rungs shall be spaced as follows:

(a) For ladders having a length of greater than 1.5 m, at least 250 mm but not greater than 300 mm.

(b) For ladders having a length of equal to or less than 1.5 m, at least 200 mm but not greater than 300 mm.

PUBLIC COMMENT NOTE Clause 7.4.3.2 contains a note regarding the proposed allowance of variation of rung spacing at the top and bottom of twin style ladders. Public comment is sought also regarding the possibility of applying these same rules to single stile ladders.

7.5.3.3 *Rung dimensions*

The distance between rungs, including landing to bottom rung in the same ladder shall be uniform and within a tolerance of ±5 mm or better. The preferred tolerance is ±2 mm.

7.5.3.4 *Fastenings*

The ladder shall be secured with fastenings at the top and at the foot of the ladder, and at intervals in order to minimize lateral swaying and twisting during use.

The design of the ladder shall determine the distance between the fastenings and shall take account of potential twisting of the ladder as a person climbs or descends the ladder.

NOTE:The fastenings should be on the back of the ladder.

7.5.4 Clearances

Clearances between the ladder and all permanent objects that are not part of the ladder installation shall be as shown in Figure 7.6 and the following:

(a) At the back edge of the rung, at least 200 mm.

(b) In front, from the front of the rung measured normal to the slope of the ladder, at least 750 mm.

(c) At the sides, at least 450 mm from the centre-line of the ladder, except as provided in Item (d) below. From a line drawn from the end of the rung at an angle of not less than 135° to the front of the rung, as shown in Figure 7.6.

(d) The hand clearance for stiles shall be not less than 50 mm.

NOTE: The vertical distance between landings or rest platforms in a single-stile rung-type ladder installation should not exceed 6 m.

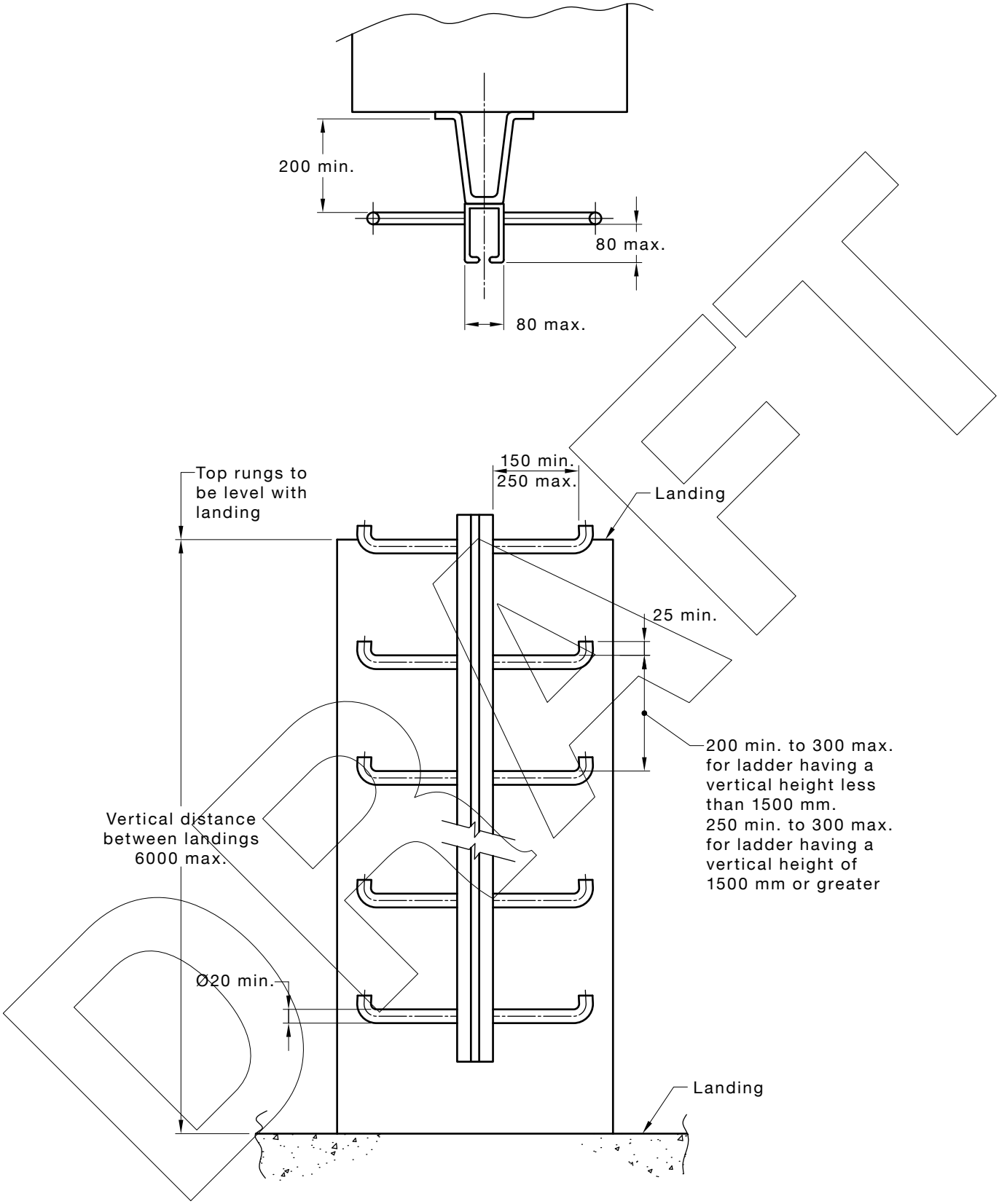

FIGURE 7.10 PRINCIPAL DIMENSIONS OF SINGLE STILE LADDERS

7.5.5 Extension above landings

Where it is necessary for a person to step off the ladder onto a landing, the ladder shall extend at least 1500 mm above the landing level and provision shall be made to ensure the harness based fall protection remains connected while the user moves onto the landing, and

if necessary, connects to another anchor point before disconnection from the ladder fall protection system.

7.5.5.1 *Side access*

A rung shall be located level with the landing and the harness based fall protection system shall be configured to allow the user to move to the landing and where required, transfer safely to another anchor system before disconnection from the fall protection system on the ladder. The horizontal distance from the centreline of the ladder to the landing edge shall be max 450 minus 50 mm.

Where guardrails are fitted to the landing platform, toe boards should not extend across ladder openings.

7.5.5.2 *Access through horizontal openings*

When access is provided through a horizontal opening, e.g. through a trap door or roof hatch, the stile shall either extend not less than 1000 mm above the opening, or handgrips above the level of the opening shall be provided. In this case, provision shall be made for the user to safely connect to an alternative anchor system before disconnection from the fall protection system on the ladder.

Where it is necessary for a person to open a trapdoor while standing on a ladder, provision shall be made for opening the trapdoor by remote means, or by the use of one hand.

7.5.5.3 *Ladder landing*

The foot of the ladder stile shall terminate at or within 150 mm of landing and the rear face of the first rung should be within the vertically projected area of the landing.

The width of any landing shall be not less than the width of the ladder or 450 mm, whichever is the greater. See Clause 7.2.4 for the length of landings.

Every access landing shall provide standing space at least 600 mm clear of cross traffic or door swing, or any other structure.

Ladder landings shall have minimum headroom of 2.1 m. Where the ladder joins a landing, the landing shall extend out to the point where the top rung lies.

7.5.6 Handrails

Handrails shall not be used on single-stile rung-type ladders.

7.6 INDIVIDUAL-RUNG LADDERS (Step-Irons)

7.6.1 General

Step-iron ladders shall comply with this Clause and with the general requirements and test methods of EN 13101 which applies to step-irons manufactured from cast iron, steel or aluminium. Where a conflict occurs, the requirements of this Clause 7.6 shall prevail.

EN 13101 specifies performance criteria for mechanical stability and resistance of step-irons. Corresponding test methods and evaluation conformity are included.

NOTE: A step-iron type ladder should only be used where it is not reasonably practicable to use any other type of ladder.

7.6.2 Angle of Slope

The angle of slope shall be not less than 80° to the horizontal, as shown in Figure 2.1. In no case shall the ladder overhang the person climbing the ladder.

7.6.3 Rungs

7.6.3.1 *General*

The rungs for step-iron type ladders shall comply with the following requirements:

(a) The rungs shall be of size and cross-sectional shape, to comply with the performance criteria in EN 13101 and this Standard.

(b) The rungs shall be manufactured from cast iron, steel, aluminium or other material to the requirements of EN 13101.

(c) The rungs shall be provided with suitable corrosion protection to the requirements of EN 13101.

(d) Corrosion protection shall ensure the performance requirements for the rungs are satisfied for the design life of the structure in which they are embedded.

NOTES:

1 Where step-irons are to be used in highly corrosive environments, additional corrosion protection measures may be required.

2 Highly corrosive environments include sewers, industrial effluent systems, marine or salt spray environments and chemical plants.

3 Alternative design methods and materials may be used, provided it can be demonstrated the result satisfies the requirements in Clause 7.6.3.

Figures 7.13 to 7.16 provide typical details and dimensional notation for step-iron type ladders.

7.6.3.2 *Rung spacing*

Rungs shall be spaced as follows:

(a) For ladders having a length of greater than 1 m, a rung spacing of not less than 250 mm, or greater than 350 mm.

(b) For ladders having a length of less than or equal to 1 m, rungs shall be evenly spaced but not greater than 300 mm apart.

The distance between rungs, including landing to the bottom rung, in the same ladder shall be uniform and within a tolerance of ±5 mm.

7.6.3.3 *Rung Dimensions*

The minimum width of the tread (T) shall be 20 mm (refer to Figure 7.14).

The minimum length of the tread (L) shall be 150 mm for single steps and 350 mm for double steps. The maximum length of the tread (L) shall be 550 mm.

The minimum stand-off distance (P) shall be:

(a) 125 mm where the ladder access effective diameter is less than 650 mm;

(b) 150 mm where the ladder access effective diameter is between 650 mm and 750 mm; and

(c) 200 mm where the ladder access effective diameter is greater than 750 mm.

The rungs shall be provided with a minimum upstand height (H) of 20 mm on each end of the tread so that the foot cannot slip off the end of the rung.

All other dimensional requirements for the rungs shall comply with EN 13101:2002

The dimensions of all rungs on the same ladder shall be uniform and within a tolerance of ±2 mm.

The rungs shall comply with the testing and deflection requirements of EN 13101:2002.

7.6.3.4 *Fastenings*

Every rung shall be permanently fixed to the adjoining structure or equipment.

Rungs shall be fixed so as to be coplanar where possible (see Figure 7.16). The use of cranked rungs on circular or curved walls is permitted.

7.6.3.5 *Testing*

The rungs for step-iron type ladders shall comply with the initial type testing and factory production control requirements of EN 13101, with the following modification:

The size of a production lot in Table 4 of EN 13101 shall be ≤ 5000 specimens with no limit on the maximum number of production days.

7.6.4 Distance between landings

Where the vertical height of the installation exceeds 6 m, and the installation consists of more than one ladder, successive ladders shall—

(a) change direction at each landing; or

(b) be staggered at each landing level.

The minimum length of the associated landings shall be not less than 900 mm from the front of the ladder (ie. measured at 90° from the rung).

Where staggering or change of direction is not possible, other suitable means, e.g. a barrier or a landing not less than 1.5 m long, or fall protection complying with AS/NZS 1891 shall be provided to prevent a person from falling more than 6 m.

The vertical distance between landings in multiple-flight ladders should be approximately equal.

NOTE: A step-iron type ladder should only be used where the vertical rise does not exceed 6 m. Where this is not reasonably practical, one or more landings should be used and the vertical distance between landings should not exceed 6 m.

7.6.5 Ladder cage

A ladder cage complying with Clause 7.5.6 shall be provided where;

(a) the ladder access minimum clearance in front of the rungs is greater than 750 mm; and

(b) a person could fall more than 3.5 m from a step-iron ladder, irrespective of landings; and

(c) there is no separate provision made for fall protection complying with AS/NZS 1891.

7.6.6 Extension above landings

A step-iron ladder shall have a means that allows a person to gain safe access onto and off the ladder rungs at the top of the ladder and at any intermediate landing. A suitable means of safe access shall include:

(a) Provision of permanent brackets and fixings to allow the use of portable step-through guardrails at the top of the ladder; or

(b) Permanent extendable posts or guardrails at the top of the ladder; or

(c) Provision for the use of a fall protection device complying with AS/NZS 1891; and

(d) Provision of step-irons that extend at least 1500 mm above the top of any intermediate landings.

Where a person could fall more than 3.5 m from a step-iron ladder, provision shall be made for the use of a fall protection device complying with AS/NZS 1891 where other required fall protection measures (e.g. ladder cages) cannot be fitted.

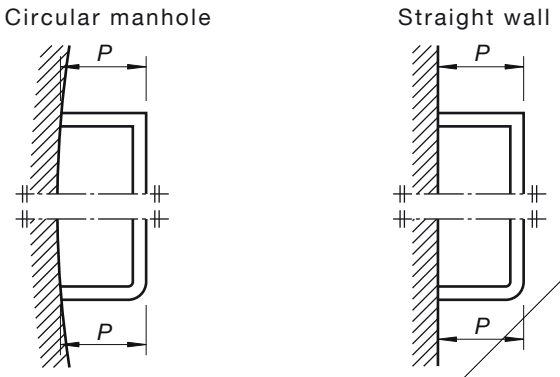

LEGEND
P Stand-off-distance (see 4.2.2.2 e)

FIGURE 7.11 INDIVIDUAL RUNG LADDER—CLEARANCE DIMENSIONS

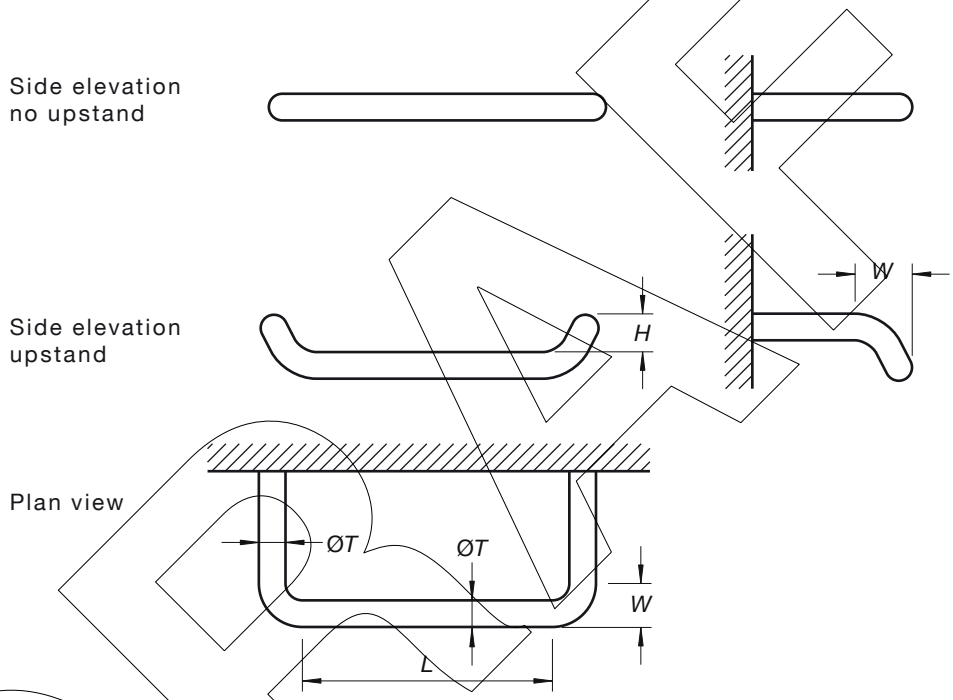

LEGEND
T Width of tread
H Height of upstand
W Length of upstand
L Length of tread

FIGURE 7.12 INDIVIDUAL RUNG LADDER—EXAMPLE FOR CIRCULAR TREAD

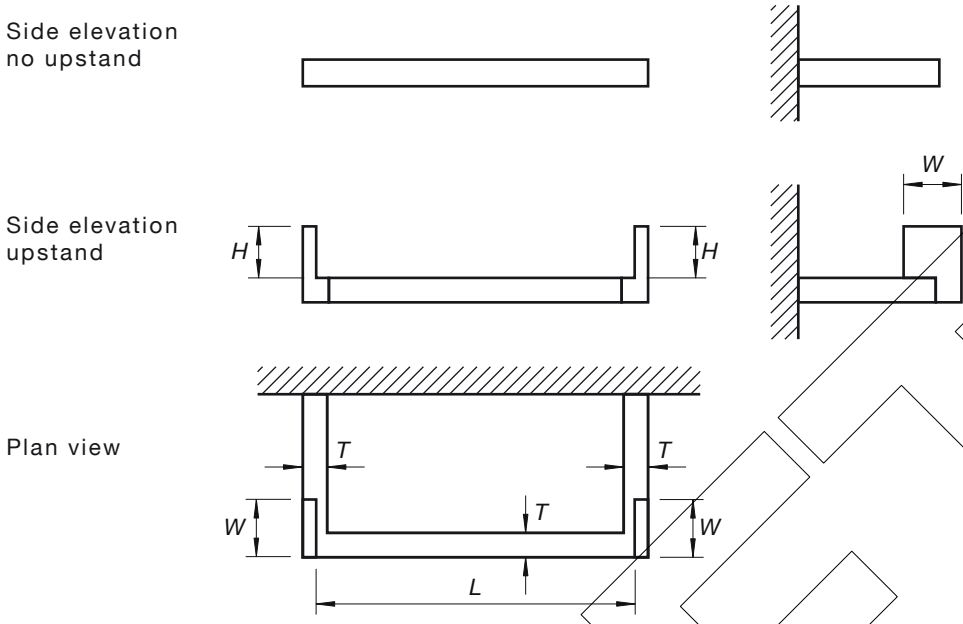

LEGEND
T Width of tread
H Height of upstand
W Length of upstand
L Length of tread

FIGURE 7.13 INDIVIDUAL RUNG LADDER—EXAMPLE FOR FLAT TREAD

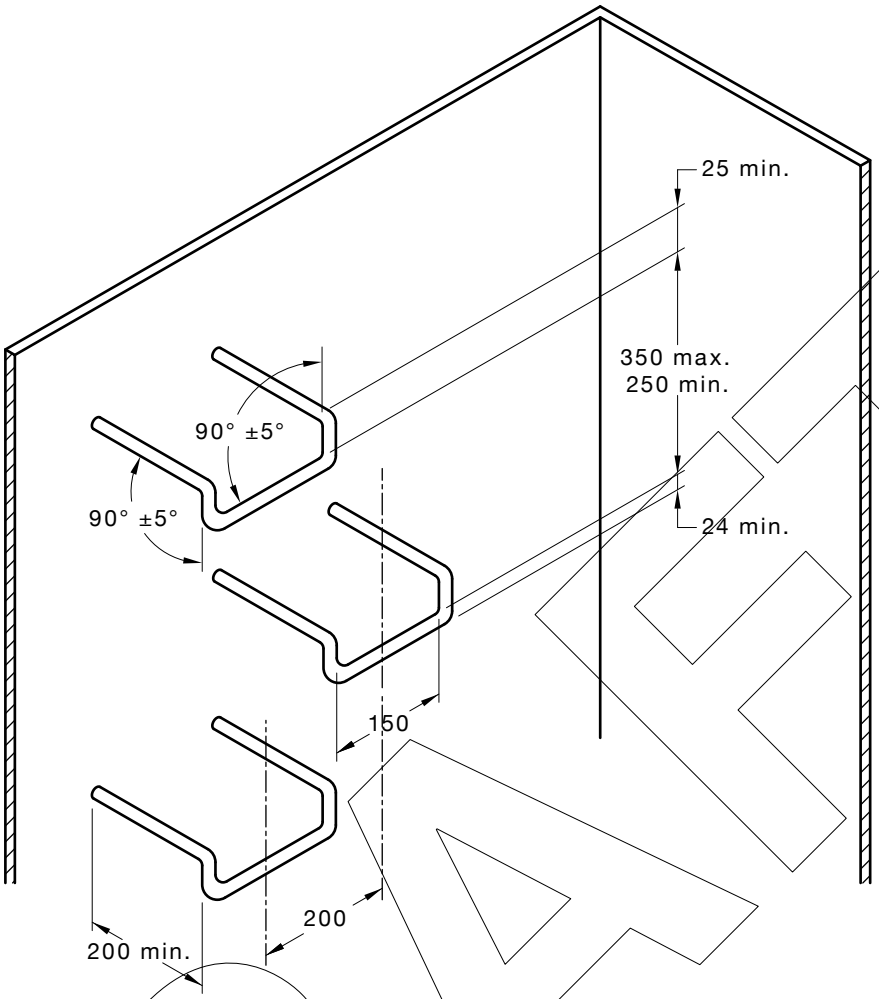

FIGURE 7.14 TYPICAL INDIVIDUAL RUNG LADDER WITH COPLANAR RUNGS

SECTION 8 ROOF ACCESS

8.1 PROVISION OF ACCESS

This Section shall apply where permanent access to the roof is required for the purposes of routine equipment or building maintenance activities.

NOTE: This is not intended to preclude the use of powered access equipment as an alternative means of access, particularly to building edges (e.g. gutter cleaning).

Where access to fragile, brittle or otherwise untrafficable roofs is required, continuous walkways, platforms and guardrails shall be provided.

8.2 ACCESS TO A ROOF

8.2.1 Internal access

The preferred means of access is an internal access door. Where it is not feasible to provide an access door, an access hatch shall be provided. Such a hatch shall be provided with;

(a) Guardrail protection on three sides, and

(b) extension of the stiles or roof-mounted handgrips to assist the user climbing through the hatch (refer to Clause 7.4.7.3).

8.2.2 Access from roof edge

Guardrailing shall be provided for a minimum distance of 2 m on either side of the entry point where a fall hazard exists.

A self-closing gate, opening inwards towards the roof, shall be installed between the guardrails at the point of entry to the roof. There shall be a landing at least 600 mm × 600 mm at the top of the stair or ladder, to permit the gate to be opened without risk of falling (see Figure 8.1).

8.3 GUARDRAILING

Although some roofs may be suitable for access without provision of special walkways and platforms, handrails or guardrailing should be provided, particularly at the perimeter of the roof. Other areas, e.g. skylights and light-wells, may also require guardrailing.

Where tools or equipment could slide or roll off the roof and fall onto persons beneath, a toeboard complying with Clauses 5.8 and 6.2.3 shall be fitted.

Where the roof slope exceeds 12°, additional guardrailing complying with Section 6 shall be provided, in order to prevent a person, tools or equipment from sliding below the mid-rail. See also Figures 8.2 and 8.3.

NOTE: This protection may take the form of infill, an additional rail, or vertical posts.

If a toeboard is installed as part of the guardrailing, it shall comply with the requirements of Clause 6.1.3.

Where the roof slop is 25° or greater, the height of the guardrail measured vertically above the roof surface shall be not less than 1200 mm.

APPENDIX A

'DEEMED TO COMPLY' COMPONENT DIMENSIONS AND SPACINGS FOR GUARDRAILING

(Informative)

This Appendix provides 'deemed to comply' dimensions that may be used where guardrailing is not specifically designed and tested in accordance with Clause 6.1.

Welding should comply with AS 1554.1-2011 Clause 1.6(b).

TABLE A1

RECOMMENDED MINIMUM DIMENSIONS FOR TYPICAL STEEL COMPONENTS

Component	Steel dimensions and shape mm	Steel pipe (outside diameter) mm
Posts	65 × 65 × 5 angle	48.3 ×3.2 wt
Top rail	50 × 50 × 5 angle	33.7 ×3.2 wt
Intermediate rails (parallel to handrail, or vertical)	40 × 40 × 5 angle	26.9 ×3.2 wt
Toeboards	100 × 6 flat	—

TABLE A2

RECOMMENDED MINIMUM DIMENSIONS AND PROPERTIES FOR TYPICAL ALUMINIUM COMPONENTS

Component	Fixings	Aluminium shape and dimensions	Alloy and temper range
Posts	M10 nut and bolt	60 mm OD tube × 2 mm wall thickness	6005A-T5, 6005A-T61, 6061-T6, 6106-T6, 6082-T5, 6082-T6, 6251-T5, 6351-T6
	M8 nut and bolt	60 mm OD tube × 3 mm wall thickness	As above, also 6063-T6
	M8 nut and bolt	Scaffold tube (48.5 mm OD tube × 4.5 mm wall thickness)	6061-T6
	M6 nut and bolt	57 mm × 57 mm × 2 mm wall thickness square posts	6005A-T5, 6005A-T61, 6061-T6, 6063-T6, 6106-T6, 6082-T5, 6082-T6, 6351-T5, 6351-T6
	M6 nut and bolt	60 mm × 60 mm × 3 mm wall thickness square posts	As above, also 6060-T5, 6063-T5
Top rails, intermediate rails	M8 nut and bolt	Scaffold tube (50 mm OD tube × 3 mm wall thickness)	6005A-T5, 6005-T61, 6060-T5, 6061-T6, 6063-T5, 6063-T6, 6106-T6, 6082-T5, 6082-T6, 6351-T5, 6351-T6
Alternative intermediate rails	M8 nut and bolt	38 mm OD tube × 2 mm wall thickness	6005A-T61, 6061-T6, 6082-T5, 6082-T6, 6351-T5, 6351-T6
Toe-boards with additional fixing at mid-span	M6 nut and bolt	110 mm wide × 5 mm thick bar	6005A-T5, 6005A-T61, 6060-T5, 6061-T6, 6063-T5, 6063-T6, 6106-T6, 6082-T5, 6082-T6, 6351-T5, 6351-T6

NOTE: Alternative alloys in the 6000 series may be used, provided that the minimum mechanical properties are equivalent or better than those of the alloys listed above.

TABLE A3

ALUMINIUM ALLOY CLASSES RELEVANT TO TABLE A2

Class	Alloys
1	6060-T5, 6063-T5, 6063-T6
2	6061-T6, 6005A-T5, 6005A-T61, 6351-T5, 6351-T6, 6082-T5, 6082-T6

APPENDIX B

TESTING OF GUARDRAILING COMPRISING RAILS AND POSTS

(Normative)

B1 INTRODUCTION

This Appendix sets out a method of assessing the strength and rigidity of—

(a) top rails comprising guardrails or handrails;

(b) intermediate rails;

(c) posts; and

(d) mountings of the railing system.

NOTE: Where an intermediate rail is of the same material and dimensions as a top rail it does not require separate testing.

B2 PRINCIPLE

A double-span section of the railing system, consisting of three posts, rails etc., is mounted on a rigid base that simulates the intended application (see Figure A1). Non-simultaneous horizontal and vertical forces are applied to the post and top rails and any resulting deflections are measured.

B3 APPARATUS

The following apparatus is required:

(a) A rigid foundation to which the railing system can be attached. The rigid foundation shall be a representative structure of the intended fixing foundation for actual service.

(b) A means of applying a horizontal point load to the post,

(c) A means of applying a horizontal and vertical point load to the top rail,

(d) A means of applying a horizontal or vertical uniformly distributed load (UDL) to the top rail.

(e) A means of timing an interval of 60 s, e.g. a stopwatch.

(f) A means of measuring deflection of the post or rail to within 1 mm.

B4 PROCEDURE (see also Figure A1)

B4.1 Assembly

The railing system shall be securely fixed to the foundation in the manner intended by the designer.

The framework to support the displacement measuring devices shall be rigidly fixed and independent of the test sample.

B4.2 Test forces

The test forces shall be as described in Clause 6.1.1 of this Standard.

B4.3 Deflection

Displacement readings shall be taken on the test sample at nominated framing member locations that represent actual structural movement. As a minimum, these shall be at the top of posts and mid-span of the top rail.

B4.4 Preload

An initial force equivalent to 50% of either the point load or the UDL shall be applied to the test sample for 1 min. This shall be taken as the settling-in or taking-up period.

B4.5 Test 1: Horizontal point load at top of post—Deflection

The procedure shall be as follows:

(a) Pre-load the test sample as described in Paragraph A4.4.

(b) Remove the pre-load force and set the deflection measuring devices to zero.

(c) Smoothly increase the force acting on the top of the post until the desired serviceability test force specified in Clause 6.1.1 is reached. Hold the test force for 1 min.

(d) Record the deflection at the top of the post.

(e) Remove the test force and, after 2 min, record the permanent deflection readings.

B4.6 Test 2: Horizontal point load on top rail or intermediate rail—Deflection

The procedure shall be as follows:

(a) Preload the test sample as described in Paragraph A4.4.

(b) Remove the pre-load force and set the deflection measuring devices to zero.

(c) Smoothly increase the force acting at the mid-span of the rail until the desired serviceability test force specified in Clause 6.1.1 is reached. Hold the test force for 1 min.

(d) Record the deflection at the mid-span of the guardrail.

(e) Remove the test force and, after 2 min, record the permanent deflection readings.

B4.7 Test 3: Vertical point load on top rail or intermediate rail—Deflection

The procedure shall be as follows:

(a) Preload the test sample as described in Paragraph A4.4.

(b) Remove the pre-load force and set the deflection measuring devices to zero.

(c) Smoothly increase the force acting at the mid-span of the rail until the desired serviceability test force specified in Clause 6.1.1 is reached. Hold the test force for 1 min.

(d) Record the deflection at the mid-span of the guardrail.

(e) Remove the test force and, after 2 min, record the permanent deflection readings.

B4.8 Test 4: Horizontal UDL on top rail or intermediate rail—Deflection

The procedure shall be as follows:

(a) Preload the test sample as described in Paragraph A4.4.

(b) Remove the pre-load force and set the deflection measuring devices to zero.

(c) Smoothly increase the force acting on the side of the top guardrail until the desired serviceability test force specified in Clause 6.1.1 is reached. Hold the test force for 1 min.

(d) Record the deflection at the top of the post and at the mid-span of the guardrail.

(e) Remove the test force and, after 2 min, record the permanent deflection readings.

B4.9 Test 5: Horizontal point load at top of post—Ultimate

The procedure shall be as follows:

(a) Preload the test sample as described in Paragraph A4.4.

(b) Remove the pre-load force and set the deflection measuring devices to zero.

(c) Smoothly increase the force acting on the top of the post until the desired ultimate test force equal to 2 × the serviceability force is reached. Hold the test force for 1 min.

(d) Remove the test force and, after 2 min, record the permanent deflection readings.

B4.10 Test 6: Horizontal UDL on top rail or intermediate rail—Ultimate

The procedure shall be as follows:

(a) Preload the test sample as described in Paragraph A4.4.

(b) Remove the pre-load force and set the deflection measuring devices to zero.

(c) Smoothly increase the force acting on the side of the top guardrail until the desired ultimate test force equal to 2 × the serviceability force is reached. Hold the test force for 1 min.

(d) Remove the test force and, after 2 min, record the permanent deflection readings.

B5 PASS/FAIL CRITERIA

B5.1 Tests 1 to 4

The deflection of the post shall not exceed LS/15 under load and the rail or post shall return to within 1S/50 of its original position.

The deflection of the top rail or intermediate rail or post shall not exceed LS/10 under load and the rail or post shall return to within LS/35 of its original position.

B5.2 Tests 5 and 6

The rails, post or system shall not suffer complete collapse and the system shall be capable of continuing to provide restraint.

NOTE: Permanent deflection is permitted.

APPENDIX C

TESTING OF INFILL

(Normative)

C1 SCOPE

This Appendix sets out a method of assessing the strength and rigidity of infill supported by guardrailing comprising a guardrailing or handrail system. Testing of infill applies for internal and external locations

C2 PRINCIPLE

A section of the guardrailing system that supports the infill to be tested is erected on a firm base as to simulate the conditions of support in the final installation. Horizontal forces as applicable are applied to the guardrailing components to be tested and any resulting deflections are measured.

C3 ACCEPTANCE CRITERIA

The following shall apply:

(a) At the design load of 500 N the horizontal deflection at the centre of a panel not supported by midrails shall not exceed 40 mm. There shall be no permanent deformation of the infill or its connections to the guardrailing system.

(b) At the design load of 1 kPa the horizontal deflection at the centre of a panel not supported by midrails shall not exceed 40 mm. There shall be no permanent deformation of the infill or its connections to the guardrailing system.

Where the wind load calculated from AS/NZS 1170.2 exceeds 1 kPa there shall be no permanent deformation of the infill or its connections to the guardrailing system.

C4 APPARATUS

The following apparatus is required:

(a) A rigid assembly to which the infill being tested can be attached.

(b) A means of applying the specified loads to the infill.

(c) A means of timing an interval of not less than 60 s, e.g. a stopwatch.

(d) A means of measuring deflection of the infill to within 1 mm. A calibrated steel rule or tape measure is appropriate.

(e) A fixed datum point for measurement deflections.

NOTE: The datum point should be separate from the structure that supports the components being tested.

C5 PROCEDURE

C5.1 Internal locations

Erect at least one bay of the guardrailing system on a firm foundation. Infill is attached to the guardrailing system for the test. The centre of one infill is tested.

Apply to the centre of the infill over a maximum area of 300 mm × 300 mm a preload of 100 N horizontally outwards from the direction of the platform. The preload shall be applied for a period of not less than 60 s.

Remove the preload and take and record the distance from the centre of the infill to the datum point.

Apply to the centre of the infill over a maximum area of 300 mm × 300 mm the design load of 500 N. The design load shall be applied for a period of not less than 60 s.

With the design load applied measure the horizontal distance from the centre of infill to the datum point.

Remove the load and inspect the infill and supporting components for failure or permanent deformation that would render the infill and supporting components structurally unserviceable.

C5.2 External locations

Erect at least one bay of the guardrailing system on a firm foundation. Infill is attached to the guardrailing system for the test. The full surface area one infill is tested.

Apply to the centre of the infill over a maximum area of 300 mm × 300 mm a preload of 100 N horizontally in the expected direction of actual loading. The preload shall be applied for a period of not less than 60 s.

Remove the preload and take and record the distance from the centre of the infill to the datum point.

Apply horizontally, in the expected direction of actual loading, to the total area of the infill the design load of 1 kPa or wind load in accordance with AS/NZS 1170.2, whichever is the greater. The design load shall be applied for a period of not less than 60 s.

With the design load applied measure the horizontal distance D from the centre of infill to the datum point.

Remove the load and inspect the infill and supporting components for failure or permanent deformation that would render the infill and supporting components structurally unserviceable.

C6 REPORT

In addition to the requirements of Appendix D, the report shall include the following information.

(a) The dimensions of the infill and its construction.

(b) The calculation of the test load for wing in accordance with AS/NZS 1170.2.

(c) The D values for each test.

(d) Details of any failure, permanent deformation or deflection.

(e) Whether the component passed or failed the test.

(f) Reference to this test method i.e. Appendix C of AS 1657.

APPENDIX D

TEST OF STAIR ASSEMBLY

(Normative)

D1 SCOPE

This Appendix sets out a method for verifying the load-carrying capacity of a stair assembly.

D2 PRINCIPLE

The prefabricated stair unit is supported in such a manner as to simulate the conditions of support in the assembled scaffold. Test forces are applied, deflections are measured and the stair unit is inspected for failure.

D3 APPARATUS

The following apparatus is required:

(a) Weights or device for applying the specified test force to the stair components.

(b) Timer.

(c) Deflection-measuring device.

D4 PROCEDURE

D4.1 Settling load test

The procedure is as follows:

(a) Support the stair assembly in such a manner as to simulate the intended conditions of support.

(b) Apply a settling load of 1 kN to a 100 mm × 100 mm steel plate at the centre of a tread or landing leaving the load in place for 3 mins.

(c) Remove the settling load and take a reference measurement from the underside of the component listed below for testing and the supporting components to a defined mark, preferably a steel plate.

D4.2 For treads and landings of width ≤ 1.36 m

The procedure shall be as follows:

(a) Apply gradually over a period of not less than 15 s a service load of 1.5 kN on an area 100 mm × 100 mm in the centre of the tread or landing. Leave the test load in place for 5 mins.

(b) Measure and record the midspan deflection.

(c) Apply gradually over a period of not less than 15 s an ultimate load of 3.0 kN on an area 100 mm × 100 mm at the centre of the leading edge of the same tread in step (a) above. Leave the load in place for 5 mins.

(d) Remove the test load, measure and record any permanent deflection. Inspect the component for signs of weld cracking or other signs of failure.

(e) For a different tread to that loaded in step (a) above apply gradually over a period of not less than 15 s a single service load of 1.5 kN on an area 100 mm × 100 mm at the centre of nosing of the tread or landing. Leave the test load in place for 5 mins.

(f) Remove the test load, measure and record the midspan deflection any permanent deflection.

(g) For the same tread to that loaded in C4.1 (e) above apply gradually over a period of not less than 15 s a single ultimate load of 3.0 kN on an area 100 mm × 100 mm at the nosing of the tread or landing. Leave the test load in place for 5 mins.

(h) Remove the test load, measure and record any permanent deflection. Inspect the component for signs of weld cracking or other signs of failure.

(i) If the landing is constructed in the same manner as the treads no tests on the landing are required.

D4.3 For treads and landings of width > 1.36 m

The procedure shall be as follows:

(a) Apply gradually over a period of not less than 15 s a service line load of 2.2 kN/m along the centre of the tread or landing. Leave the load in place for 5 mins.

(b) Measure and record the midspan deflection of the centre of the nosing and the centre of the landing under the load.

(c) For the same tread to that loaded in C4.2 (a) above apply gradually over a period of not less than 15 s an ultimate load of 4.4 kN/m placed along the centre of the tread or landing. Leave the test load in place for 5 mins.

(d) Remove the test load measure and record any permanent deflection. Inspect the component for signs of weld cracking or other signs of failure.

(e) For a different tread to that loaded in C4.2 (a) above apply gradually over a period of not less than 15 s an ultimate load of 4.4 kN/m placed along the nosing of the tread or landing. Leave the test load in place for 5 mins.

(f) Remove the test load measure and record any permanent deflection. Inspect the component for signs of weld cracking or other signs of failure.

D4.4 For all treads and landings in a stair assembly

The procedure shall be as follows:

(a) Apply over a period of not less than 5 mins to all treads and landings a loading of not less than 2.5 kPa uniformly distributed on each tread and landing. Leave the load in place for 5 mins.

(b) Measure and record the midspan deflection of the underside of the centre tread and the centre of supporting landings under the test load. The maximum permitted deflection is L/200, where L = span of the tread or landing between supports.

(c) Remove the test load and inspect all welds for signs of weld cracking or other signs of failure.

D5 REPORT

The report shall include the following information:

(a) Identification of stair type.

(b) The test loads applied, their location and the length of time they were applied.

(c) Details of any failure, permanent deformation or deflection.

(d) Whether the stair passed or failed the test.

(e) Detailed description, drawing or photograph of the force-transmitting device used;

(f) Name and location of testing facility;

(g) Date of test;

(h) Name, position and qualifications of the person responsible for the test;

(i) Signature of the person responsible for the test, including the date of test;

(j) The outcome of the test; and whether the acceptance criteria were met;

(k) A reference to the test method (e.g. Appendix D4 of AS 1657).

Where more than one set of tests is included in one report, the report as a whole shall only be signed, not each set of tests.

APPENDIX E

TEST REPORTS

(Normative)

Reports of tests carried out on assemblies or components shall include the following information:

(a) Type of component tested;

(b) Manufacturer's or supplier's name of the system;

(c) Detailed description, drawing or photograph of the component or equipment being reported on;

(d) The test forces calculated in accordance with the test procedure;

(e) Detailed description, drawing or photograph of the force-transmitting device used;

(f) Name and location of testing facility;

(g) Date of test;

(h) Name, position and qualifications of the person responsible for the test;

(i) Signature of the person responsible for the test, including the date of test;

(j) The outcome of the test; and whether the acceptance criteria were met;

(k) A reference to the test method (e.g. Appendix B of AS 1657).

Where more than one set of tests is included in one report, the report as a whole shall only be signed, not each set of tests.

APPENDIX F

SELECTION OF STAIRWAYS, WALKWAYS AND FIXED LADDERS

(Informative)

F1 GENERAL

The overall considerations and other issues associated with the selection of a means of access are summarised in Table F1 of this Appendix. The recommended minimum fall protection measures are summarised in Table F2.

F2 SELECTING A WALKWAY

A level walkway or access from ground level is preferred where frequent access is required. Any control devices and other parts of equipment where frequent access is needed should be easily reached from this level.

When considering the use of a walkway, the following points shall be considered as a minimum:

(a) A level or sloping walkway can be the best solution where space permits.

(b) A walkway facilitates easier movement of tools and equipment.

F3 SELECTING A STAIRWAY

A stairway may be the best solution where—

(a) more than two rises are required; and

(b) there is insufficient space for a walkway.

The angle of slope for a stairway ranges from 20° to 45°, with the preferred range being between 30° and 38°.

F4 SELECTING A FIXED LADDER

F4.1 General

The selection of a ladder as a design solution for regular access should be avoided wherever possible due to the greater risk of falling, the greater physical effort required and the restriction imposed on carrying tools and equipment.

At high risk locations, where the use of a ladder is not appropriate, the design of the structure to which access is necessary should be changed to enable a safer means of access to be used.

The following are typical conditions under which the use of a ladder may be appropriate.

NOTE: Generally, at least two of the conditions need to be met before the use of a ladder can be considered appropriate.

(a) Infrequent use of the ladder is foreseen.

NOTE: When estimating the frequency of use, all the phases of the life of the equipment to which access is necessary should be considered. Therefore a ladder is not appropriate if frequent use during major maintenance tasks is foreseen.

(b) The user will not be carrying any large tools or other equipment by hand.

(c) Only one user will be likely to be using the ladder at any one time.

(d) The ladder is not intended to be used to evacuate injured persons.

(e) The structure does not allow stairs or other basic means of access to be readily used (e.g. driver access to a tower crane).

(f) The ladder is to be used predominantly for access to or from a location and not for the carrying out of any works.

The safety issues discussed in Paragraphs B4.2 to B4.5 also need to be considered when selecting a ladder.

F4.2 Step-type ladders

Step-type ladders should only be selected where stairs cannot be used because of space limitations.

F4.3 Rung-type ladders (twin-stile ladders)

Rung-type ladders are physically more difficult to use than step-type ladders or stairs.

F4.4 Rung-type ladders (single stile ladders)

In addition to the considerations given in Table A1, the following issues are also associated with single stile ladders:

(a) If the user slips and falls, there is a risk of impalement on the rung ends.

(b) There is a danger of entangling clothing or safety equipment on the rungs.

(c) They may be used only where a two stile ladder cannot be used or installed, e.g. on telecommunications poles.

NOTE: Single stile ladders may not be suitable for use within confined spaces due to the risk of snagging or entanglement with rescue equipment.

F4.5 Individual-rung ladders (step-irons)

Step-iron type ladders are physically more difficult to use than step-type or other rung-type ladders.

In addition, step-iron type ladders and can be difficult to access safely without specific additional provisions at the point of access (e.g. at the entrance hatch of a below ground pit).

Where another means of preventing access is not provided, the access point for a step-iron ladder shall be locked off to prevent unauthorized use.

F5 FALL PROTECTION FROM LADDERS

F5.1 General

Refer to Appendix G for details of the recommended minimum fall protection measures for various types of ladder installations.

TABLE F1

SELECTION OF MEANS OF FIXED ACCESS

Angle	Type of access	Considerations	Other issues	Application
0° to 3°	Level walkway (Section 5)	Frequent access required Suitable for use when light loads or tools need to be carried	Slip resistance of walking surface important Preferable to a stair with 2 or 3 steps	Roof access Access between service platforms Plant or maintenance access
3° to 20°	Sloping walkway (Section 5) Preferred range is 3° to 10°	Suitable for use where there is a small vertical distance Good for emergency evacuations Suitable for two way traffic Less physical effort required than stairs or ladders Transverse walkways to have a level walking surface	Guardrailing complying with Section 6 and incorporating handrails may be required Slip/fall protection required at 18 m centres when angle of slope is 12° or greater Width of walkway to be selected to suit expected use	Warehouse loading area access Access across unsafe areas Access across inclined roof areas
20° to 45°	Stairways (straight flights) (Section 7) Preferred range is 30° to 38°	Frequent access required Suitable for use when light loads or hand tools need to be carried Good for low to medium heights Suitable for emergency evacuations Suitable for two way traffic Less physical effort required than ladders	Not less than 2 risers Maximum height of single flight is 3870 mm (18 risers at 215 mm) Width and angle of stair to be selected to suit expected use	Roof access Access to and between service platforms General plant access Access to service bays Vehicle operator access

(continued)

TABLE <F1 (*continued*)

Angle	Type of access	Considerations	Other issues	Application
60° to 70°	Step type ladder (Section 7)	Periodic access 6 m maximum vertical distance between landings Use if there is no need to carry loads or large tools The structure precludes other preferred methods of access	Ensure that persons using the ladder can only do so when facing the ladder Consider need for restricted access or locked-off	Mobile plant access Vehicle load access Access to low level landings or platforms Step-over for pipework or other obstructions
70° to 90°	Rung-type ladder (twin stiles) Section 7) Preferred range 70° to 75°	Infrequent access 6 m maximum vertical distance between landings There is a need to carry large tools or equipment Not specifically intended for evacuation purposes Physically harder to use than other types of access	Ladders exceeding 6 m in fall distance require a cage or fall protection device Generally intended for single person use Consider need for restricted access or locked-off	Access to plant or structure where limited space precludes other forms of access Towers or masts Mobile plant
85° to 90°	Rung-type ladder (single-stile) (Section 7)	Use only where other means of access cannot be used Consider 6 m maximum vertical distance between landings Used in a near vertical slope only	Ladders exceeding 3.5 m in fall distance require some form of fall protection device Must be restricted access or locked off	Telecommunications masts
80° to 90°	Individual rung-type ladder (step-irons) (Section 7) Preferred range 80° to90°	Infrequent access Use only where other means of access cannot be used Used in near vertical distance between landings 6 m maximum vertical distance between landings Provision required for safe access onto and off the ladder	Ladders exceeding 3.5 m in fall distance require a cage or fall protection device Single person use only Must be restricted access or locked off Corrosion protection required	Access to plant or structure where space precludes other forms of access Stormwater and sewerage access pits Electricity cable pits

APPENDIX G

FALL PROTECTION OF LADDERS

(Informative)

G1 GENERAL

It is recognised that harness based fall arrest equipment has been used for many years in industry. Provision for the use of such equipment may be necessary in areas where a person is at high risk of falling while climbing a ladder and where other higher level controls are either not available or not appropriate.

Step type ladders should be designed to have a slope as close to 60° as possible to minimize the risk of a fall.

A rung-type ladder should be designed to have a slope as close to 70° as possible, because as the ladder slope approaches vertical, the risk of falling is increased.

G2 ALLOWANCE FOR HARNESS BASED FALL ARREST EQUIPMENT

Where harness based fall arrest equipment is used, the additional forces induced by the arresting of a person falling are significant and need to be considered in the design of the ladder system and thus its rungs, stiles and fixings as appropriate.

Design loads for fall arrest shall be not less than 15 kN in accordance with the requirements of AS/NZS 1891.

NOTES:

1 When using fall arrest equipment on ladders, the need for rescue in the event of a fall should be considered. This also applies when retro-fitting equipment.

2 Where a fall arrest device is fitted on the centreline of a ladder, adequate clearance for the user's feet should be provided.

G3 APPLICATION OF FALL PROTECTION TO LADDERS

Table G2 shows the recommended minimum fall protection measures applicable to various installations.

In Table G2 the term "fall distance" refers to the distance from the lowest of the person's feet to the lowest point to which it is likely that they could fall. Determination of the lowest point should include the possibility of falling to a lower level than the base of the ladder.

Where a fall arrest system is specified it should comply with the relevant parts of AS/NZS 1891 series.

G4 TYPES OF FALL PROTECTION SYSTEMS FOR LADDERS

The provision of fall protection on a ladder is a complex issue that should be identified during the design stage after the installation and usage conditions are known. The following aspects should be considered;

(a) design and configuration of the ladder installation,

(b) impact of site specific conditions and surrounding environment,

(c) expected frequency of ladder use,

(d) controls and restrictions applied to ladder access,

(e) the training and supervision of users at the particular location being considered.

(f) required rescue systems and the associated regular training and specialised equipment

In general terms, a single fall protection system cannot be universally applied to all site locations and the selection of appropriate fall protection on ladders should be based on the site conditions and usage.

Table G1 sets out the key considerations for ladder cage and harness based fall protection systems which would form part of a broader risk assessment to determine the most appropriate form of ladder fall protection

TABLE G1

GENERAL CONSIDERATIONS FOR LADDER CAGE AND HARNESS BASED FALL PROTECTION SYSTEMS FOR LADDERS

Item	Advantages	Disadvantages
Ladder cage	Passive protection— always present and requires little or no supervision of users Requires little user training – useful where many persons may need to access ladder Requires no special user equipment Little on-going maintenance No storage or maintenance of user equipment required Far more effective on sloping ladder than vertical ladder Makes ladder lock out relatively easy	Will not necessarily prevent or arrest a fall but will guide falling person to the ladder base rather than away from ladder Reduced fall protection effectiveness as the ladder becomes more vertical Once initiated, a fall may not be fully arrested within a short distance May cause injury to falling person during a fall event May cause entrapment and injury of a falling person in an elevated and confined location There is no mechanism in place to limit the forces imposed on the body during a fall Difficult to safely access and rescue a trapped person. Delayed rescue may compromise effective first aid Increased risk for rescue personnel where access to a trapped person is to commence from below A rescue system may be required to be in place, together with on-going maintenance and regular training May require lock out procedures to prevent unauthorised use Adds to surface area of ladder which may cause additional wind loads to support structure
Type 1, 2 and 3 Guided and Inertia type fall arrestors to AS/NZS 1891 series	Positive form of fall protection when used correctly Remains effective as the ladder becomes more vertical Remains effective as the climbing height increases Fall should be arrested within a short distance Less physical structure to impede access and rescue Less wind load on the supporting structure	Requires users to have regular training and be supervised to ensure correct use Requires use of specialised equipment by users (harness, fall device) and storage of same Requires on-going maintenance of equipment on ladder and of user hardware Specific designs required to deal with narrow ladders and at points of direction change High potential anchor loads need to be supported by the ladder and the structure via ladder mountings Ladder lock out may be necessary and can be potentially more difficult (than cage) to achieve

TABLE G2

RECOMMENDED MINIMUM FALL PROTECTION MEASURES

Angle	Type of access	Minimum Fall Protection for a Fall Distance of -			Platforms and Landings	Other Requirements
		0 m to 3.5 m	>3.5 m to 6 m	>6 m		
0° to 3°	Platforms and Landings (Section 4)	—	4.5 m maximum vertical distance between landings for Rung type ladders at 75° to 90°	6 m maximum vertical distance between landings for other ladders	Refer to Sections 4 and 7 for minimum lengths and other requirements	Landings are also required at regular intervals for walkways and stairways
0° to 3°	Level walkway (Section 5)	—	—	—	Not Required	Slip resistance of walking surface important
3° to 12°	Sloping walkway (Section 5) Preferred range is 3° to 10°	—	—	—	Not Required	Guardrailing complying with Section 6 and incorporating handrails may be required
12° to 20°	Sloping walkway (Section 5)	—	—	—	Landings may be required at regular intervals for steep (>12°) walkways	Guardrailing complying with Section 6 and incorporating handrails may be required. Slip / fall protection required at 18 m centres when angle of slope is 12° or greater (Refer to 5.3.2)

(*continued*)

DRAFT ONLY

TABLE G2 (*continued*)

Angle	Type of access	Minimum Fall Protection for a Fall Distance of -			Platforms and Landings	Other Requirements
		0 m to 3.5 m	>3.5 m to 6 m	>6 m		
20° to 45°	Stairways (straight flights) (Section 7) Preferred range is 30° to 38°	–	–	–	Landings are required at regular intervals for stairways	Maximum height of single flight is 3870 mm (18 risers at 215 mm) A means of preventing a person falling more than 36 risers shall be provided (Refer to 7.2.2)
60° to 70°	Step type ladder (Section 7)	Three (3) points of contact when climbing , and Handrails fitted to ladder	Three (3) points of contact when climbing , and Handrails fitted to ladder	Restricted access or locked-off, and Landings at not more than 6m vertical distance, and Three (3) points of contact when climbing , and Handrails fitted to ladder, and Side screens fitted to ladder	Maximum 6 m vertical distance between landings, and Provide change of direction, or stagger, or other protection (e.g. barrier, or 1.5m landing length)	Ensure that persons using the ladder can only do so when facing the ladder. Provide warning signs Provide other controls as required based on site hazards, ladder configuration and frequency of use.

(*continued*)

DRAFT ONLY

TABLE G2 (*continued*)

Angle	Type of access	Minimum Fall Protection for a Fall Distance of -			Platforms and Landings	Other Requirements
		0 m to 3.5 m	>3.5 m to 6 m	>6 m		
70° to 75°	Rung-type ladder (twin stiles) (Section 7) Preferred range 70° to 75°	Three (3) points of contact when climbing	Three (3) points of contact when climbing	Restricted access or locked-off, and Landings at not more than 6m vertical distance, and Three (3) points of contact when climbing , and A ladder cage, or A harness based fall arrest system	Maximum 6 m vertical distance between landings, and Provide change of direction, or stagger, or other protection (e.g. barrier or 1.5 m landing length)	Provide warning signs Provide other controls as required based on site hazards, ladder configuration and frequency of use.
75° to 90°	Rung-type ladder (twin stiles) (Section 7)	Three (3) points of contact when climbing	Restricted access or locked-off, and Three (3) points of contact when climbing, and Landings at not more than 4.5 m vertical distance, or A ladder cage, or A harness based fall arrest system	Restricted access or locked-off, and Landings at not more than 4.5 m vertical distance, and Three (3) points of contact when climbing , and A ladder cage, or A harness based fall arrest system	Maximum 4.5 m vertical distance between landings, and Provide change of direction, or stagger, or other protection (e.g. barrier or 1.5 m landing length)	Provide warning signs Provide other controls as required based on site hazards, ladder configuration and frequency of use.

(*continued*)

TABLE G2 (*continued*)

Angle	Type of access	Minimum Fall Protection for a Fall Distance of -			Platforms and Landings	Other Requirements
		0 m to 3.5 m	>3.5 m to 6 m	>6 m		
85° to 90°	Rung-type ladder (single-stile) (Section 7)	Restricted access or locked-off, and Three (3) points of contact when climbing	Restricted access or locked-off, and Three (3) points of contact when climbing , and A harness based fall arrest system.	Restricted access or locked-off, and Landings at not more than 6m vertical distance, and Three (3) points of contact when climbing , and A harness based fall arrest system	Maximum 6 m vertical distance between landings, and Provide change of direction, or stagger, or other protection (e.g. barrier or 1.5 m landing length)	Provide warning signs Provide other controls as required based on site hazards, ladder configuration and frequency of use.
80° to 90°	Individual Rung-type ladder (step-irons) (Section 7) Preferred range 80° to 90°	Restricted access or locked-off, and Three (3) points of contact when climbing	Restricted access or locked-off, and Three (3) points of contact when climbing , and A harness based fall arrest system	Restricted access or locked-off, and Landings at not more than 6 m vertical distance, and Three (3) points of contact when climbing , and A harness based fall arrest system	Maximum 6 m vertical distance between landings, and Provide change of direction, or stagger, or other protection (e.g. barrier or 1.5m landing length)	Provisions required for safe access onto and off the ladder Provide warning signs Provide other controls as required based on site hazards, ladder configuration and frequency of use.

NOTES:

1 Fall protection while climbing a fixed ladder may take the form of

(a) Three (3) points of contact

(b) Side screens (step ladders only)

(c) Ladder cage

DRAFT ONLY

(d) Harness based fall arrest system

(e) Any combination of these (as appropriate to the site)

2 Other appropriate controls for safe access to fixed ladders (as determined by a risk assessment) may include:

(a) Using another form of access other than a ladder (e.g. MEWP or scaffolding)

(b) A first man up climbing process

(c) Warning signs

(d) A means of controlling access to the ladder such as a locked room or restricted area

(e) Gates, such as chain gates

(f) A locked cover over the bottom rungs

(g) A combination of these controls

DRAFT ONLY

APPENDIX H

LABELLING AND DOCUMENTATION

(Informative)

PUBLIC COMMENT:

In the interests of ensuring traceability of product, the committee seeks comment on the possibility of making the following a requirement of AS 1657 rather than, as is currently the case, this information being something that may be supplied.

H1 SCOPE OF SECTION

This Section sets out recommended labelling, and documentation that an installer should provide to the purchaser of the platform, walkway, stairway, guardrailing or ladder (the system).

H2 LABELLING OF INSTALLATION

The installation should bear a permanent label in a readily visible position that indicates—

(a) the name of the manufacturer of the platform, walkway, stairway, guardrail or ladder;

(b) the name of its installer;

(c) the name of the certifier of the system (if any);

(d) the date of installation; and

(e) a statement of the system's compliance with this Standard and its installation in accordance with its manufacturer's instructions.

(f) Where regular inspection/testing of the installation is required, the date of inspection/ 'current until' date.

The label should be durable and suitable for the environment in which it is to be located, with an expected minimum life of 7 years.

Where the installation does not comply with this Standard, a statement detailing the area of non-compliance should be held on-site.

Where any modifications or alterations are made, they should be accompanied by an additional label stating compliance or non-compliance.

H3 DOCUMENTATION TO BE SUPPLIED

The manufacturer/installer should supply documentation to the purchaser for each installation setting out the following:

(a) Compliance statement setting out level of compliance to this and other relevant Standards

(b) Listing of any unique component serial numbers

(c) Listing of any special provisions for use (e.g. Training, additional equipment, higher than normal levels of supervision, rescue provisions etc.)

(d) Defined frequency of inspection and servicing required for all equipment

(e) Additional information as relevant (e.g. Load ratings where limitations apply, provisions for fall arrest attachments and loadings).

*** END OF DRAFT ***

PREPARATION OF AUSTRALIAN STANDARDS

Australian Standards are prepared by a consensus process involving representatives nominated by organizations drawn from all major interests associated with the subject. Australian Standards may be derived from existing industry Standards, from established international Standards and practices or may be developed within a Standards Australia technical committee.

During the development process, Australian Standards are made available in draft form at all sales offices and through affiliated overseas bodies in order that all interests concerned with the application of a proposed Standard are given the opportunity to submit views on the requirements to be included.

The following interests are represented on the committee responsible for this draft Australian Standard:

Australian Aluminium Council

Australian Building Codes Board

Australian Chamber of Commerce and Industry

Australian Industry Group

Australian Rope Access Association

Department of Finance & Services NSW

Department of Industry, Tourism and Resources (Commonwealth)

Department of Justice (Tasmania)

Department of the Premier and Cabinet (South Australia)

Energy Networks Association

Engineers Australia

Ladder Manufacturers Association of Australia

Master Builders Australia

Property Council of Australia

Safety Institute of Australia

WorkCover New South Wales

WorkSafe Victoria

Standards Australia

Standards Australia is an independent company, limited by guarantee, which prepares and publishes most of the voluntary technical and commercial standards used in Australia. These standards are developed through an open process of consultation and consensus, in which all interested parties are invited to participate. Through a Memorandum of Understanding with the Commonwealth government, Standards Australia is recognized as Australia's peak national standards body.

Australian Standards

Australian Standards are prepared by committees of experts from industry, governments, consumers and other relevant sectors. The requirements or recommendations contained in published Standards are a consensus of the views of representative interests and also take account of comments received from other sources. They reflect the latest scientific and industry experience. Australian Standards are kept under continuous review after publication and are updated regularly to take account of changing technology.

International Involvement

Standards Australia is responsible for ensuring that the Australian viewpoint is considered in the formulation of international Standards and that the latest international experience is incorporated in national Standards. This role is vital in assisting local industry to compete in international markets. Standards Australia represents Australia at both ISO (The International Organization for Standardization) and the International Electrotechnical Commission (IEC).

Electronic Standards

All Australian Standards are available in electronic editions, either downloaded individually from SAI Global, or via on-line and CD ROM subscription services. For more information phone 131 242 or visit www.saiglobal.com/shop